Gate Driver Selection

APEC 2017

Mitchell Van Ochten- Field Applications Engineer

Overview

Topics:

- Isolation technologies *pros and cons*
- Isolation voltage ratings
- Output drive current capability
- I/O delay time
- Additional features

Isolation Technologies (Optical)

Optical

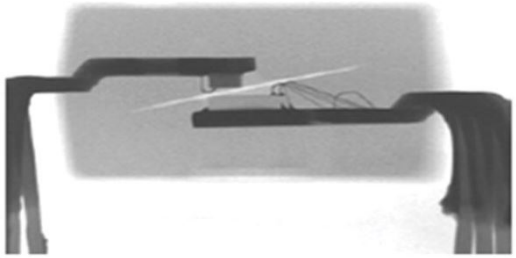

2. An x-ray of an optocoupler indicates the critical placement of functional elements.

Figure 1

Advantages:

- Mature technology (oldest)
- Physical barrier utilizing dielectric insulating material
- Used by Avago (Broadcom), Fairchild (ON Semi), and others

Disadvantages:

- Relatively large drive current for primary LED
- Unable to implement ‘Exclusive OR’ shoot through feature
- Relatively large variation in propagation delay with temperature change
- Aging (decreased LED output) over time

Isolation Technologies (RF)

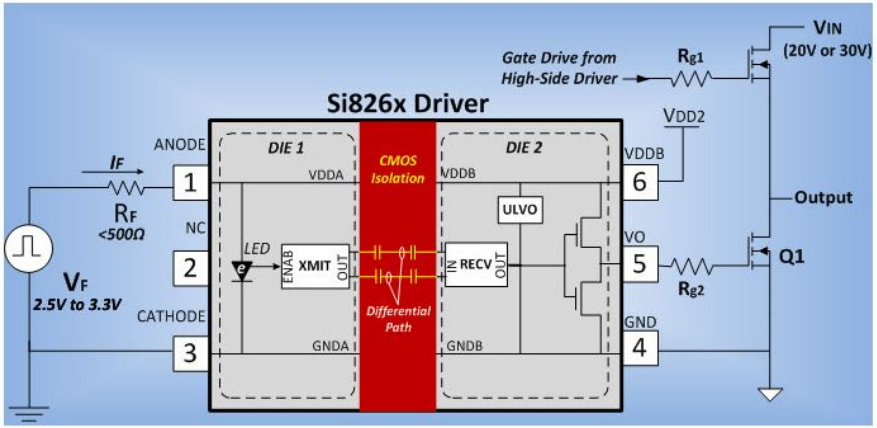

Figure 2

[Used by Silicon Labs]

Advantages:

- Requires less input power than optoisolator technologies
- Lower propagation delay than optoisolators
- Total immunity to magnetic fields
- No LED to wear out

Disadvantages:

- Higher current consumption than magnetic isolation
- Carrier frequency limits pulse position accuracy(?)

Isolation Technologies (Capacitive)

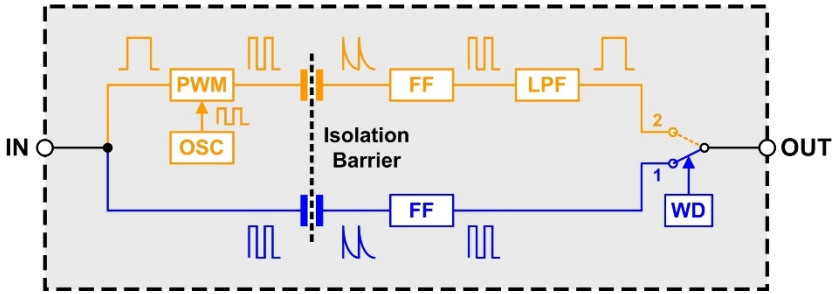

Figure 4

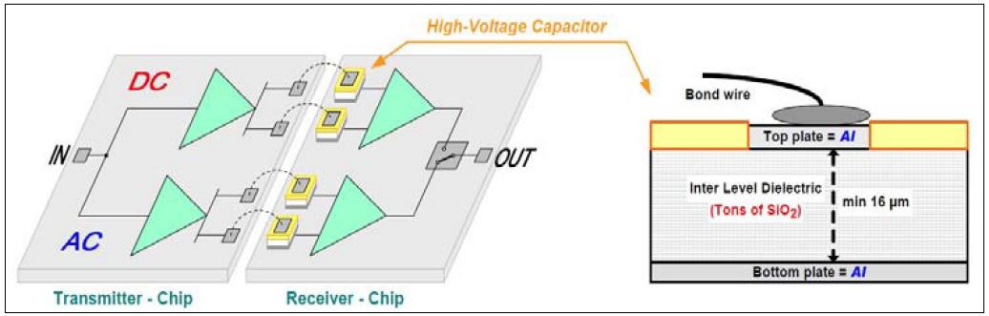

Figure 5

Advantages:

- Physical barrier utilizing dielectric insulating material
- No LED to wear out
- Total immunity to magnetic fields
- Used by Texas Instruments (developed by Burr Brown)

Disadvantages:

- Higher current consumption than transformer isolation

Isolation Technologies (Coreless Transformer)

Principal suppliers: Analog Devices, Infineon, ROHM

Advantages:

- No LED to wear out
- Used by many suppliers
- Consistent propagation delay vs. temperature
- Lowest current consumption
- Generally higher CMR than optical isolators
- Lower part-to-part skew than optical

Disadvantages:

- Some sensitivity to magnetic fields

ROHM's Isolation Configuration

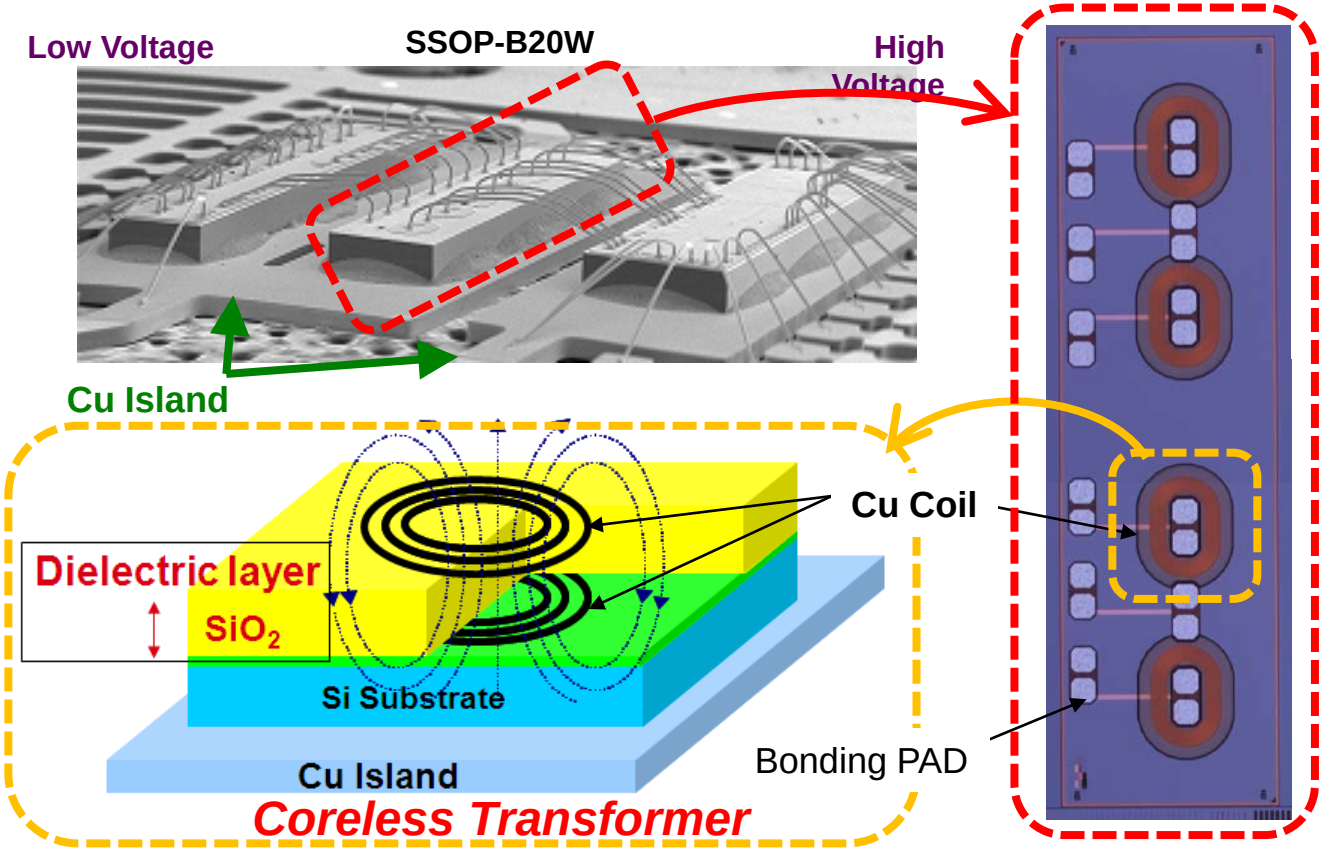

Isolation Performance

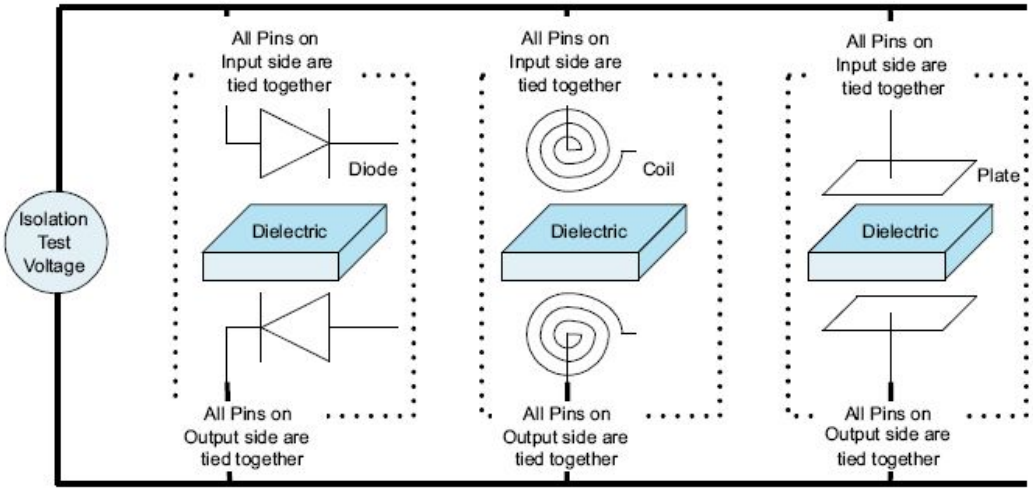

Figure 3

For insulation tests isolators are treated as two-terminal devices

Various Component Standards for Isolators

- Component Standards Scope -
Optical and Digital Isolators

IEC 60747-5-5: Optoisolators:
This component standard gives the terminology, essential ratings, characteristics, safety tests as well as the measuring methods for photocouplers (optocouplers). Photocoupler is an Optoelectronic device designed for the transfer of the electrical signals by utilizing optical radiation to provide the coupling with electrical isolation between the input and the output. Reinforced insulation.[1]

VDE 0884-10: Non-Opto (Digital) Isolators:
This component standard gives the terminology, essential ratings, characteristics, safety test and the measuring methods of magnetic and capacitive couplers. Magnetic and capacitive couplers consist of a transmitter stage and a receiver stage on either side of a galvanic insulation barrier. The device transmits a signal across the insulation boundary where a receiver stage is able to detect the transmitted signal and uses the information to generate the electrical output signal. This standard specifies magnetic and capacitive isolation barrier mechanisms and the insulation functions for Basic and Reinforced insulation.[1]

UL 1577: Optocouplers and Digital Isolators:
This component standard covers optical isolators, also called optical couplers or photocouplers: a) intended to provide unidirectional signal transfer between dielectrically isolated circuits and, b) intended for use in equipment with a supply voltage not exceeding 600Vac (rms or dc). These requirements evaluate the electrical isolation properties of single and double [reinforced] [1] (protection) insulation between the isolated circuits of the optical isolator.

Figure 6

Creepage and Clearance

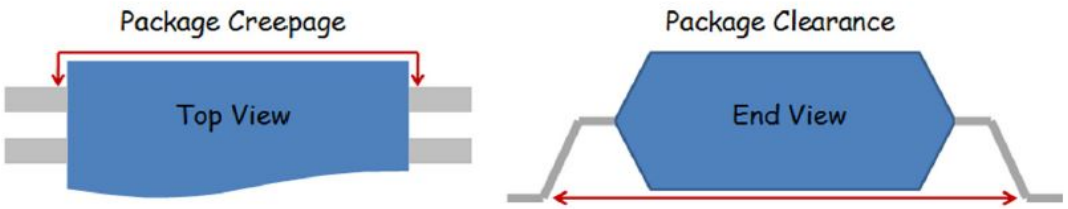

AC Mains	Mains Category	Class II Transient Voltage	Basic Creepage/Clearance	Reinforced Creepage/Clearance
240Vrms	300Vrms	2500Vrms	2.5mm/2mm	5mm/4mm
400Vrms	600Vrms	4000Vrms	4mm/3.2mm	8mm/6.4mm

Figure 7

- Required distances depend on the ‘Pollution Degree’ of the environment
- Creepage requirements can be reduced by using conformal coating
- Creepage between PCB traces can be increased by milling slots

Output Current

- Required current is directly related to the Gate Charge (Qg) Operating Speed (AN-944 International Rectifier, APT0103 Advanced Power Technology)
- Output current from Gate Driver ICs ranges from about 1A to about 5A
- Generally driving a single TO-220 or TO-247 device does not require buffering
- Driving power modules almost always requires buffering

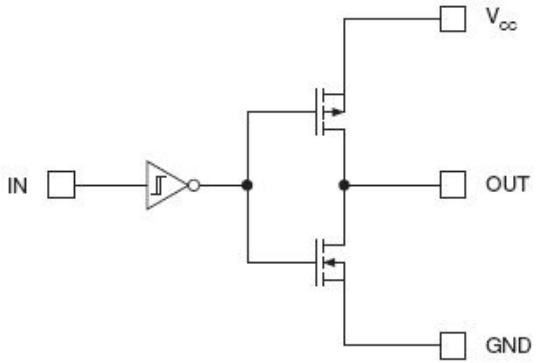

IXYS IXDN614 (14A)

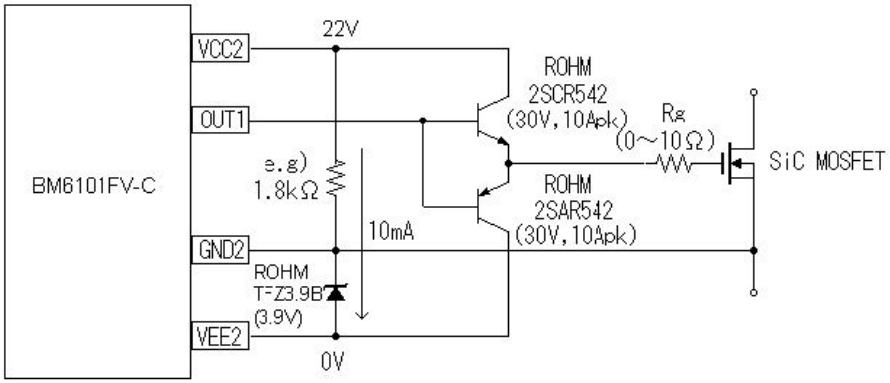

Figure 8

Input-Output Delay Time (Propagation Delay)

- All technologies introduce propagation delay
- Other variables may be more important than the actual delay
  - Propagation distortion (difference between turn-on and turn-off)
  - Propagation ***change*** from part to part
  - Propagation ***change*** over temperature

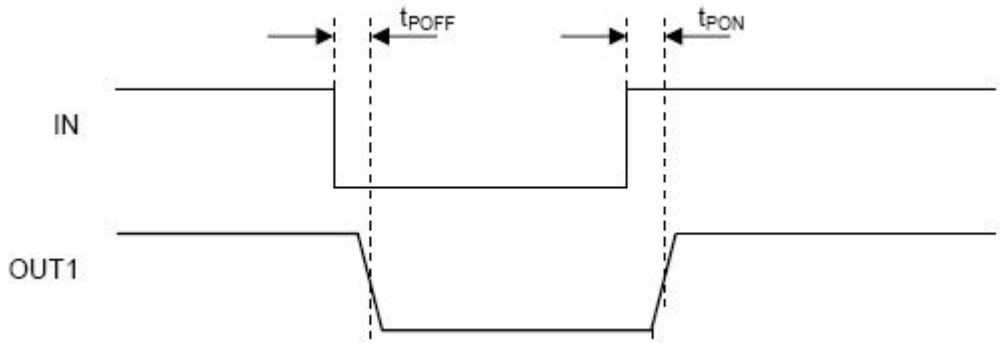

Propagation Delay Comparison example

Conditions: BM6105FW, ROHM Eval Board, VCC1=5.0V, VCC2=15V, VEE2=0V, INA=10kHz, OUT1_H/L=No Load

Turn ON time (Ta = 25℃)

BM6105FW

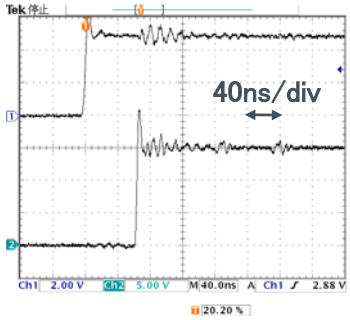

ACPL-336J

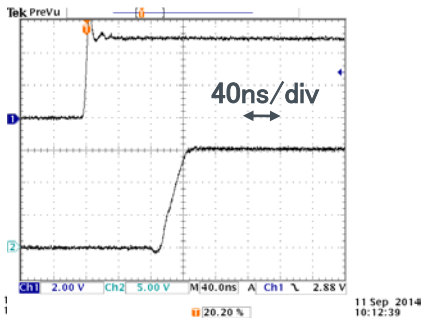

Turn OFF time (Ta = 25℃)

BM6105FW

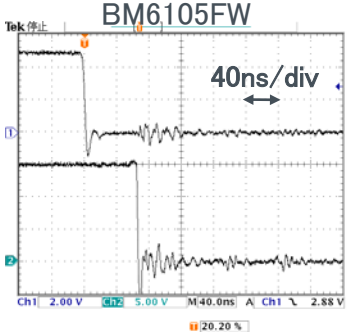

ACPL-336J

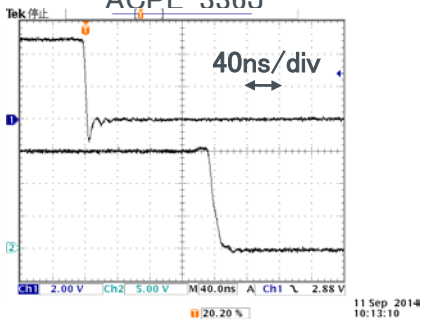

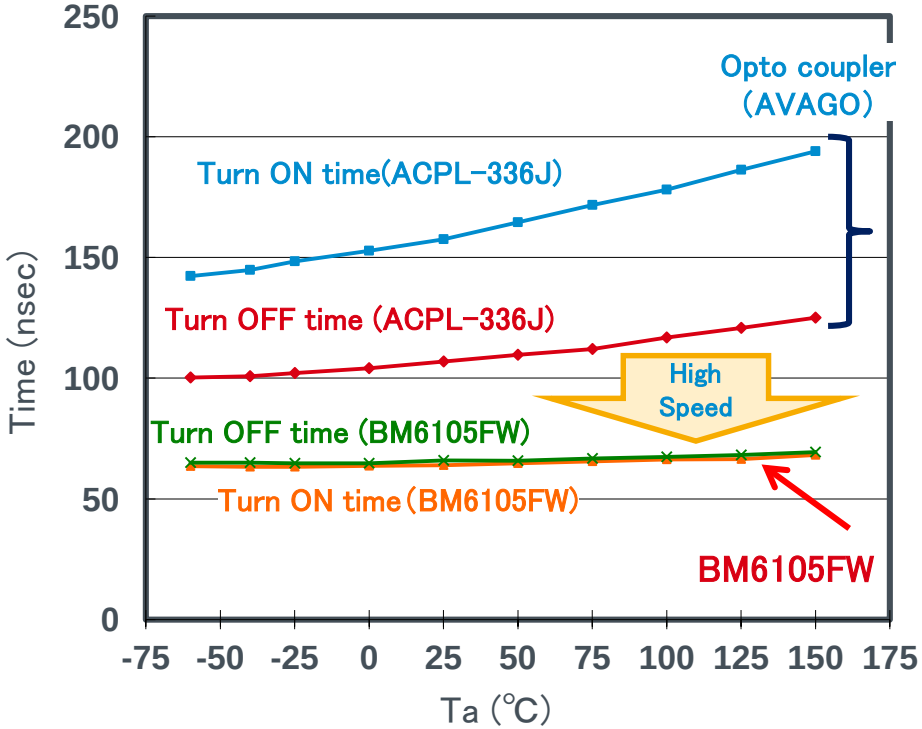

Temperature Monitoring

- IGBT and SiC Power Modules often contain either an NTC thermistor or a diode to monitor temperature
- In the event of catastrophic failure, plasma or the DC Bus may contact the temperature sensor

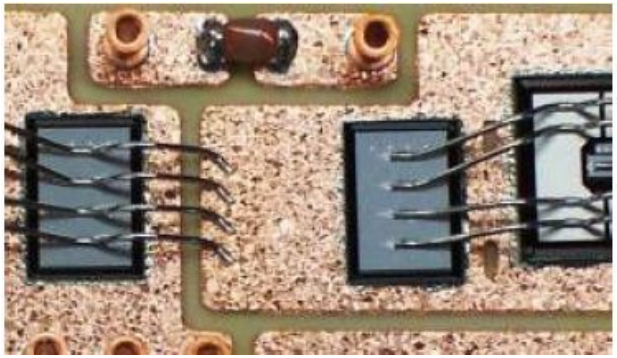

Figure 9

- Many systems need to continuously monitor the baseplate temperature
- For safety reasons, there must be isolation back to the primary side
- ROHM offers Gate Drivers with a current source for the sensor and either a comparator with isolation *or* a PWM signal back to the primary side

Miller Clamp and Negative Power Supply

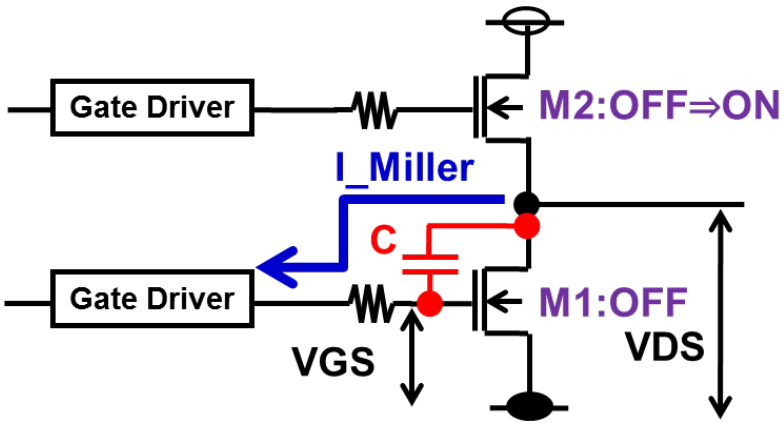

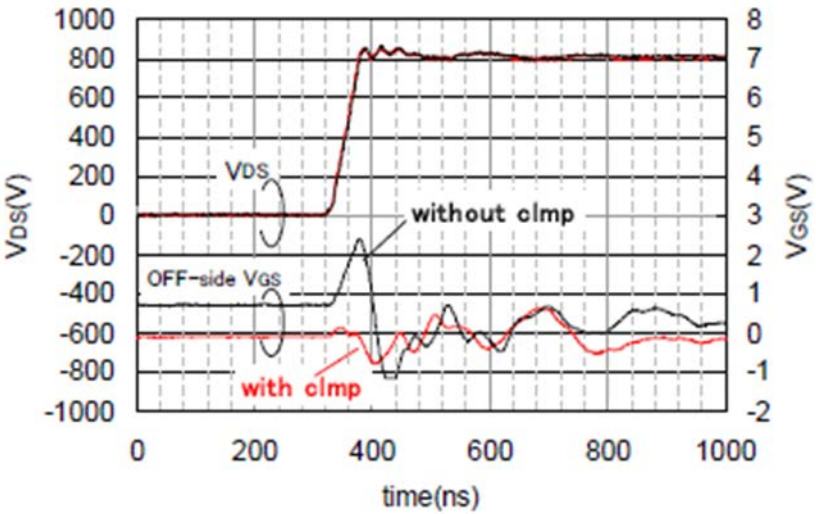

- Most high-power applications will need a Miller clamp, negative turn-off voltage, *or both*
- Some gate drivers include the Miller clamp transistor, while others require an external transistor
- The industry trend is to try to avoid the cost and complexity of a negative supply

Separated Outputs

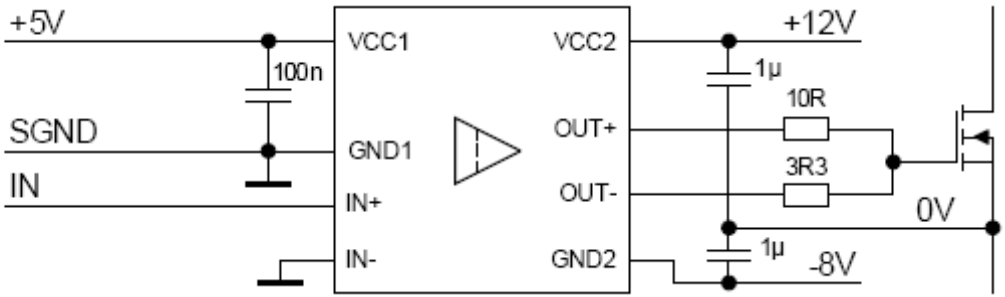

Figure 10

- This feature makes it easy to choose optimal times for turn-on and turn-off
- Eliminates the need to add one or two diodes for asymmetrical switching
- Requires an extra pin
- Offered by several manufacturers

Safety Features

- Under Voltage Lock Out (UVLO) for **both** *primary* and *secondary* sides
- Desaturation (Desat) functionality
- *Slow turn-off* for Desat or over-current (prevents overshoot)
- Exclusive-OR input stage
- Temperature monitoring (of the power module)
- Output state feedback (what's delivered to the gate matches the input)

Desaturation (Desat) Function

17

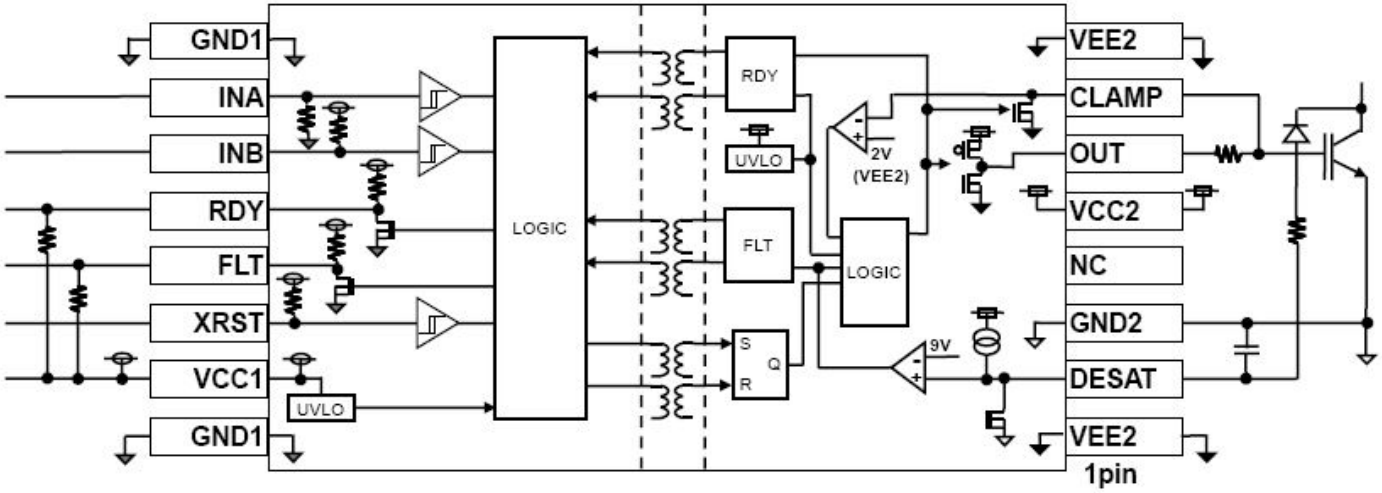

BM6105FW

- When OUT = HIGH a 500uA current source tries to pull up the DESAT pin
- During normal operation the Drain (or Collector) is just a few volts above GND
- If the IGBT Collector (or MOSFET Drain) exceeds 9V the comparator will trip
- Output will remain OFF and FLT is asserted until user sends XRST

Built-In Flyback Controller

- How to provide isolated power to the ‘6-pack’ of power devices?
- One method is to use a ‘centralized’ power supply with 4 secondary windings
- Each High Side driver requires its own supply (x3)
- The 3 Low-Side drivers can share a single supply (x1)

The disadvantage is that longer wires may be needed to prevent coupling between supplies and routing gets complicated

The alternative method is to buy 6 small supplies or BUILD YOUR OWN

- Built-in controller makes the job easier and takes up less real estate on the PCB
- Uses 6 small transformers instead of 1 large transformer
- Isolated supply is available exactly where you need it, **not 6” away from the Driver**
- Transformer manufacturers can provide off-the-shelf parts for this application

Gate Driver Comparison

	A	B	C	D	E	F	G	H	I
1				**Isolated Gate Driver Comparison**					
2									
3		T.I.	Analog Devices	Infineon	Avago (Broadcom)	ROHM	Fairchild (ON)	ROHM	Si Labs
4	**Item**	ISO5500	ADuM4223	1ED020I12F2	ACPL-339J	BM6104FV	FOD8332	BM60015	Si8261BAC
5	Number of channels	1	2	1	1	1	1	1	1
6	Fault Output	Yes	No	Yes	Yes	Yes	Yes	No	No
7	Desat Detection	Yes	No	Yes	Yes	Yes	Yes	No	No
8	Exclusive OR input protection	Yes	No	Yes	No	Yes	No	Yes	No
9	Miller Clamping available	No	No	Yes	No	Yes	Yes	Yes	No
10	Output Current	2.5 A	2 A	2 A	1.0 A	3 A	2.5 A	4.5 / 3.9 A	1.8A / 4A
11	Coupling Method	Capacitive	Transformer	Transformer	Optical	Transformer	Optical	Transformer	RF
12	Propagation Delay (max)	300 nsec	59 nsec	195 nsec	300 nsec	150 nsec	250 nsec	75 nsec	60 nsec
13	Maximum Output voltages	+20 / -10	+18 / 0	+20 / -8	+25 / -10	+24 / -12	+30/0	+24 / 0	+30 / 0
14	Max. Supply Current (no sig)	8.5 mA	2.4 mA	9 mA	12 mA	0.7 mA	5 mA	0.14 mA	6 mA
15	Common Mode Transient immunity	50 kV / usec	25 kV / usec	50 kV / usec	25 kV / usec	100 kV / usec	35 kV / usec	100 kV / usec	35 kV / usec
16	V_{ISO} Isolation Test Voltage (60 sec)	4243 VRMS	5000 VRMS	3750 VRMS	5000 VRMS	2500 VRMS	4243 VRMS	3750 VRMS	3750 VRMS
17	V_{IORM} Maximum Working Voltage	680 V peak (was 1200)	849V peak	1420V peak	1414 V peak	DC Bus up to 566 VDC	1414 V peak	DC Bus up to 891 VDC	DC Bus up to 891 VDC
18	Creepage / Clearance (mm)	8.1 / 8.3	7.6 / 7.6	8.5 / 7.5?	8.3 / 8.3	7.6 / 6.1?	8	8.1 / 8.1	7.0 / 7.2
19	Package	SOIC_W (16)	SOIC_W (16)	PG-DSO-16	SO-16	SSOP-B20W	SO-16	SSOP-B10W	DIP8
20	Temperature Range	-40° C to +125° C	-40° C to +125° C	-40° C to +105° C	-40° C to +105° C	-40° C to +125° C	-40° C to +100° C	-40° C to +105° C	-40° C to +125° C
21	link to datasheet	ISO5500	ADuM4223	1ED020I12F2	ACPL-339J	BM6104FV	FOD8332	BM60015FV	Si8261

References

Figure 1 : Ching, Vincent (Jan 2013) Avago Technologies "Use Dynamic Common-Mode Rejection Test To Evaluate Industrial Isolator Performance", Electronic Design

Figure 2 : Alfano, Don, Silicon Labs "Pin-Compatible Digital Isolated Gate Drivers Make Life Easy for Power Designers"

Figure 3 : Gingerich, Kevin and Sterzik, Chris (Jan 2006) Texas Instruments "The ISO72x Family of High-Speed Digital Isolators" Application Report SLLA198

Figure 4 : Kugelstadt, Thomas, (May 2009) Texas Instruments "How to design with capacitive digital isolators" EE times

Figure 5 : Kugelstadt, Thomas, Texas Instruments "Capacitive isolators: functional principle, internal construction"

Figure 6 : Lohbeck, David, National Instruments "Understanding isolator standards and certification to meet safety requirements" EDN January 26, 2016

Figure 7 : Cantrell, Mark, Analog Devices "Reinforced Isolation in Data Couplers" Technical Article MS-2242

Figure 8 : ROHM Semiconductor (August 2014) "SiC Power Devices and Modules" Application Note

Figure 9 : Infineon Technologies (Nov 2009) "Using the NTC inside a power electronic module" AN2009-10

Figure 10 : Infineon Technologies (June 2015) "Separate output variant for MOSFET" 1EDI60N12AF Data Sheet

ROHM SEMICONDUCTOR

ROHM Semiconductor U.S.A., LLC