Increased Power Density Through Capacitive Conversion

Revolution Enabled

APEC – March 7, 2018

Presenter Bio

- **President and CEO of Smart Prong Technologies, Inc. (dba Helix Semiconductors)**
- **15 Years Consulting to Tier 1 Chip & Technology Companies, former CEO of multiple high tech companies**
- **Company perfected switched-capacitor power-transfer techniques for highest efficiency with > 40 Patents**

helix semiconductors
efficiently powering the future

HEADQUARTERS
Irvine, California & Tulsa, OK

FOUNDED
2012

Three Key Messages

- **Power Density is King**
- **Capacitive Voltage Conversion is Real**
- **Capacitive Isolation Devices Approved**

The Problem

Ubiquitous Use of Electronics Demands More Power

Demand for More Power Cries Out for Improved Efficiency

- **Transformers have been in use for > 100 years**
- ***What is Next? More of the same?***

Increasing Power Density and High Conversion Efficiency and Transformers are Contradictions in Terms!

Power Density – 5-10X Better

Benchmark Module

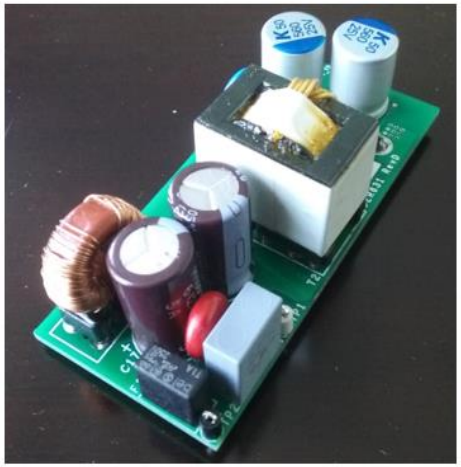

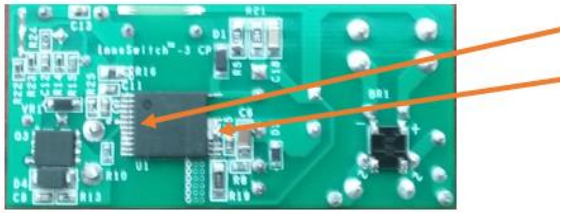

PD = 0.5W/cm3 to 1W/cm3

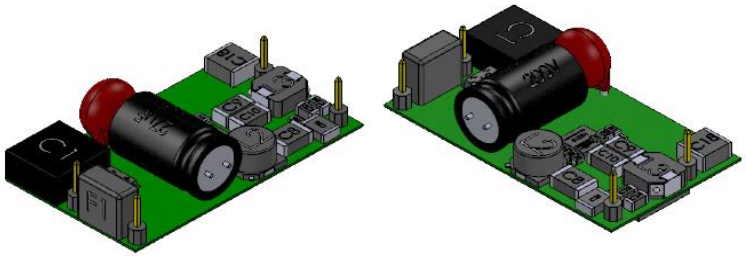

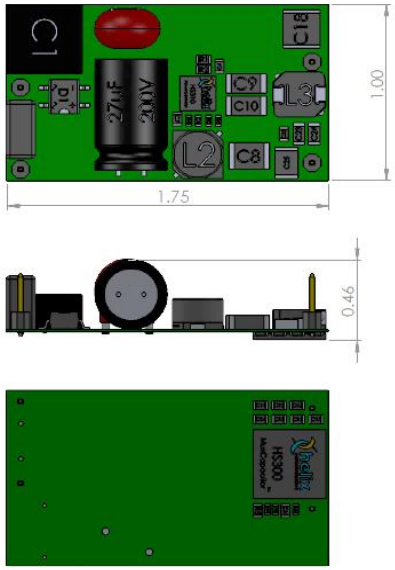

Switched Cap Module Example

PD = Up to 7W/cm3

Revolution – Step 1

- ***Basic Switched-Capacitor Topology***
  - Single or Multiple Stages
  - Multiple Gain/Conversion Ratios

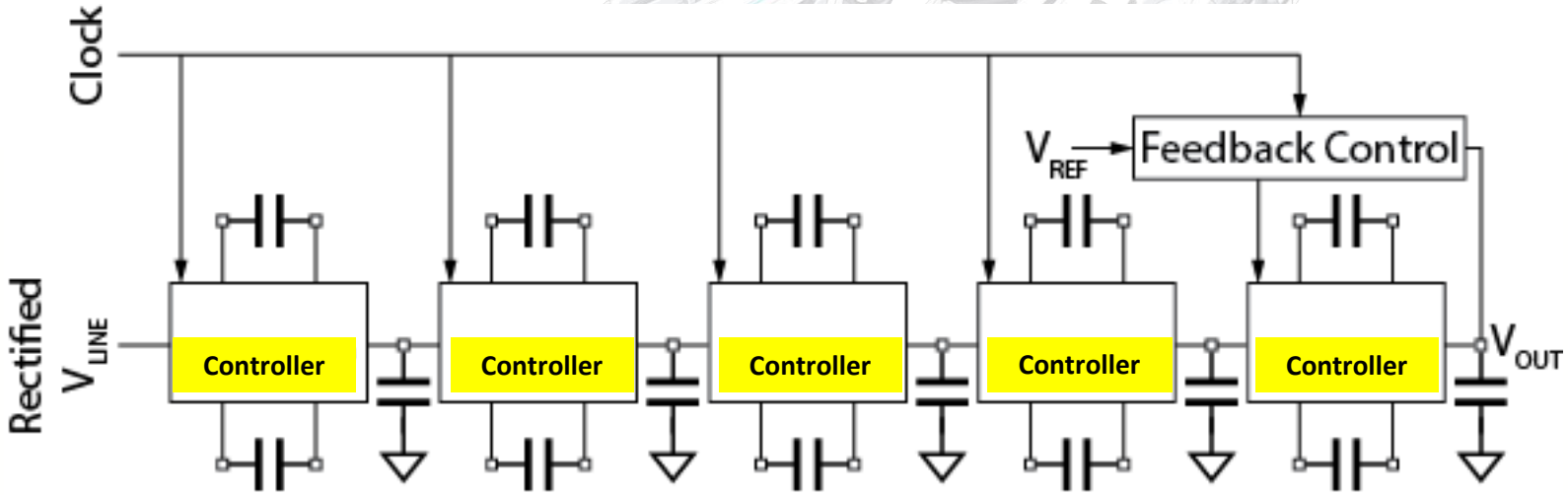

Capacitors lay the foundation for true Revolution!!

Voltage Conversion

- ***Capacitors and Switches Scale the Input Voltage for Best Efficiency***

- ***Optimized Switching Frequencies - reduced clock rates possible***

- ***Advantages over Inductive Converters***
  - High efficiency – full load to no-Load/light-load
  - Low Static Power ➔ Lowest No-Load (“Vampire”) Power ➔ Zero Power

Enhanced Efficiency

- Highest system efficiency across varying loads, especially light load and no load

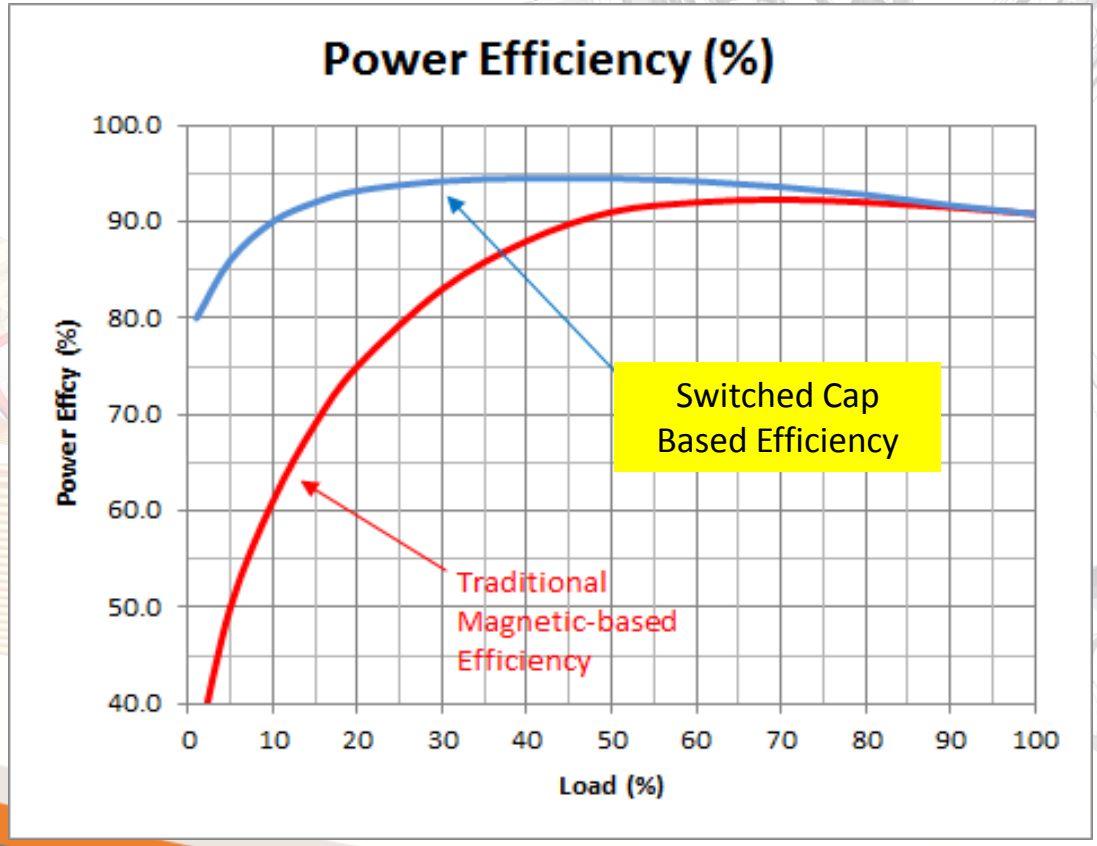

Isolation – The Final Frontier!

***Galvanic Isolation* – "I wish I could eliminate transformers, but it's always been done that way?"**

- **Who** - UL, IEC, ANSI, others
- **What** - isolate human and other sensitive electronics from transients
- **Why** - User safety, system reliability

Traditional Method – transformer and optical isolation

Revolution – Step 2

Capacitive Isolation

- What are the barriers and why are companies slow to adopt?
- UL has cleared the way
- It takes a revolutionary leader to make it happen!

Relevant UL / IEC Standards

- ***IEC 60950 – Safety of Information Technology Equipment***
  - Summarizes use of X^2, Y^3 Capacitors in the application
- ***IEC 60384-14 – Fixed Capacitor Standard***
  - Summarizes use of X^1, Y^2 Capacitors
  - Prescribes preferred Capacitor ratings / specifications
- ***UL 1283 – Electromagnetic Interference Filters***

Approved and Certified

- ***Class X²*** - across the AC Line, tested to 2500V
- ***Class Y²*** - Power Transfer or Grounded Capacitors, tested to 5000V - designed to fail 'open' instead of 'short'
- ***UL-Certified Y² Capacitors Available Today***
  - ≤ 2nF meet Touch Current and Creepage Requirements

Meeting UL Isolation Requirements

"The Isolation Transformer Can Be Replaced With Capacitors"

- UL-Certified Y^2 Capacitors Must Bridge the Isolation Barrier
- A Touch Current Limit of 250µA will not be exceeded for a UL-Certified capacitor
- The capacitor must have 4mm of Creepage distance

"Two Capacitors in Series Required to Meet 5kV"

- The NovaCap P/N ES2215 1nF Y^2 Capacitor meets all the UL requirements for Touch Current and Creepage
- The UL Report – *Ref. #3146C527792926* documents these findings

Power Module Using Y^2 Cap

Isolation Barrier

Y^2 Capacitor

AC Input

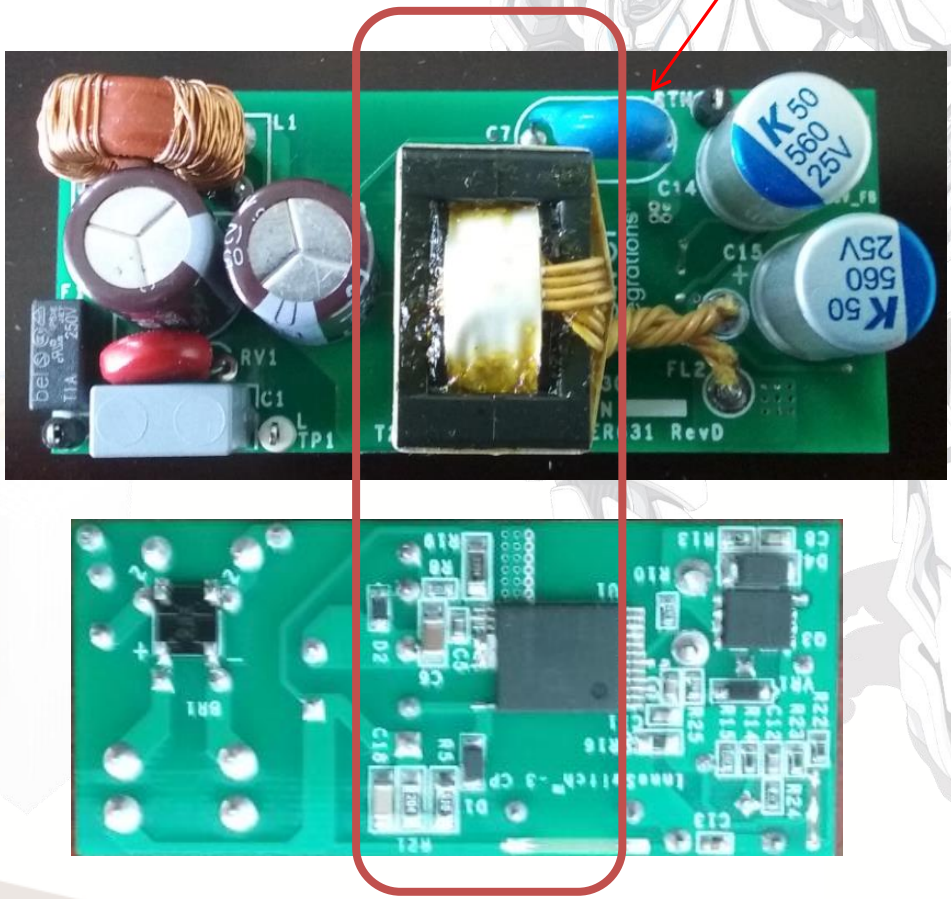

DC Output

Example Reference Design

- Submitted for UL Review – prelim approval

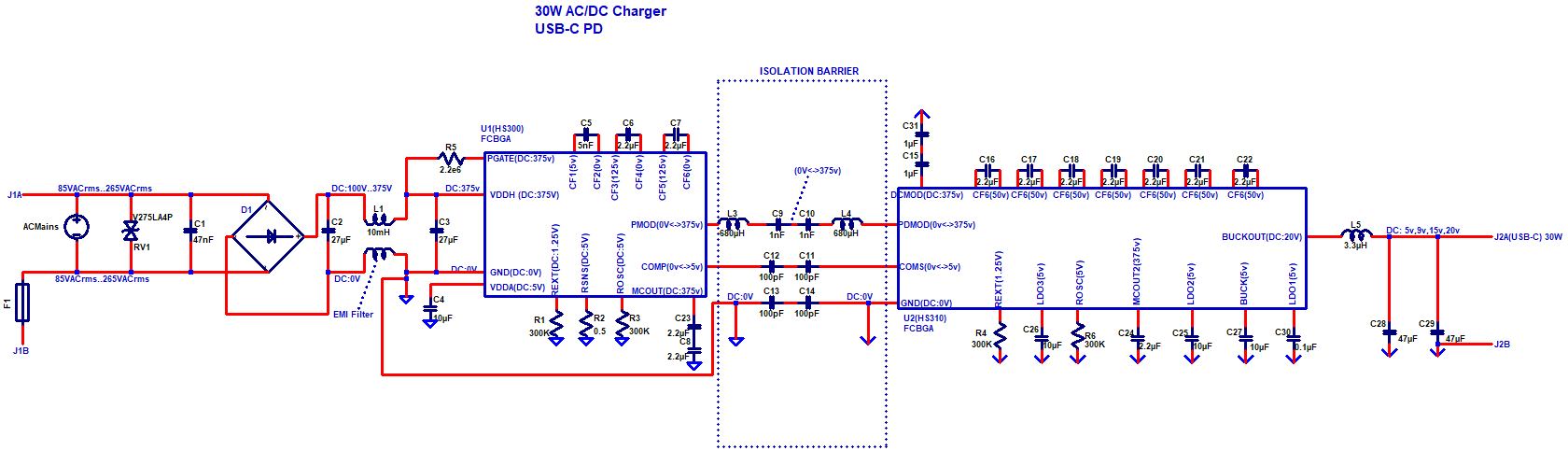

Conclusion

- **Power Density is King**
- **Capacitive Voltage Conversion is Real**
- **Capacitive Isolation Devices Approved**