Turn-on performance comparison of current-source vs. voltage-source gate drivers

Frank Wolfgang, Zheng Ziqing
Infineon Technologies

Content

Agenda

What does “current-source” and “voltage-source” gate drivers mean?

Current source

- Current sources have a high resistive output by default.
- Any additional voltage drop in the gate drive loop has no influence on the gate current I_g (inside limits).
- Supposed to damp oscillations

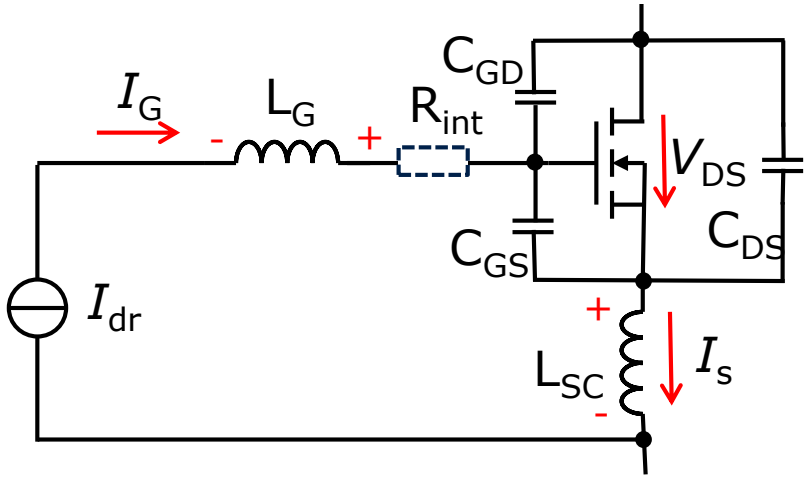

Voltage source

- Voltage sources shall be as low resistive as possible.
- Any additional voltage drop in the gate drive loop has immediate influence on the gate current I_g.
- Prone to oscillations

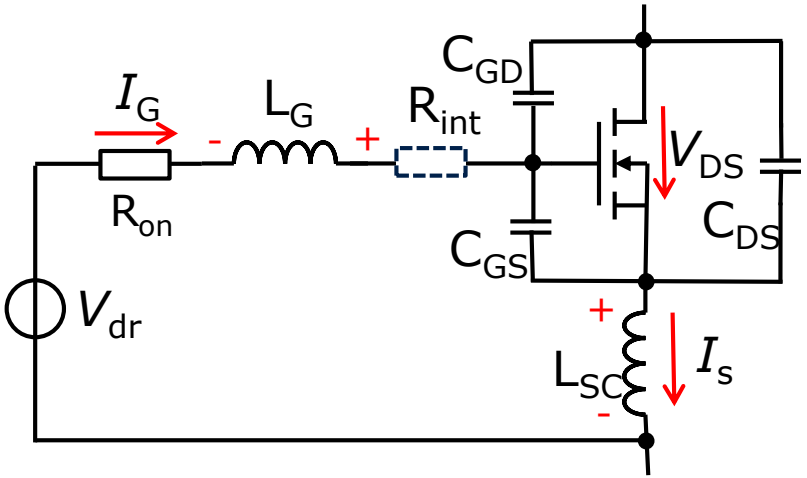

Comparison of gate driver IC functions

Current source (1EDS20I12SV)	Voltage source (1ED020I12-F2)
Isolated gate driver	Isolated gate driver
Current source control for turn-on integrated	2 A output capability
Adjustability of swiching speed from input side on-the-fly	Adjustability of swiching speed by manual change of R_g
DESAT	DESAT
Current sense input	---
Optional Two-level turn-off	Optional Two-level turn-off
Soft turn-off	---
Precise output side monitoring	Limited output side monitoring

Agenda

Driver boards for FF1200R12IE5 1200 A / 1200 V power module

Current source (1EDS20I12SV)

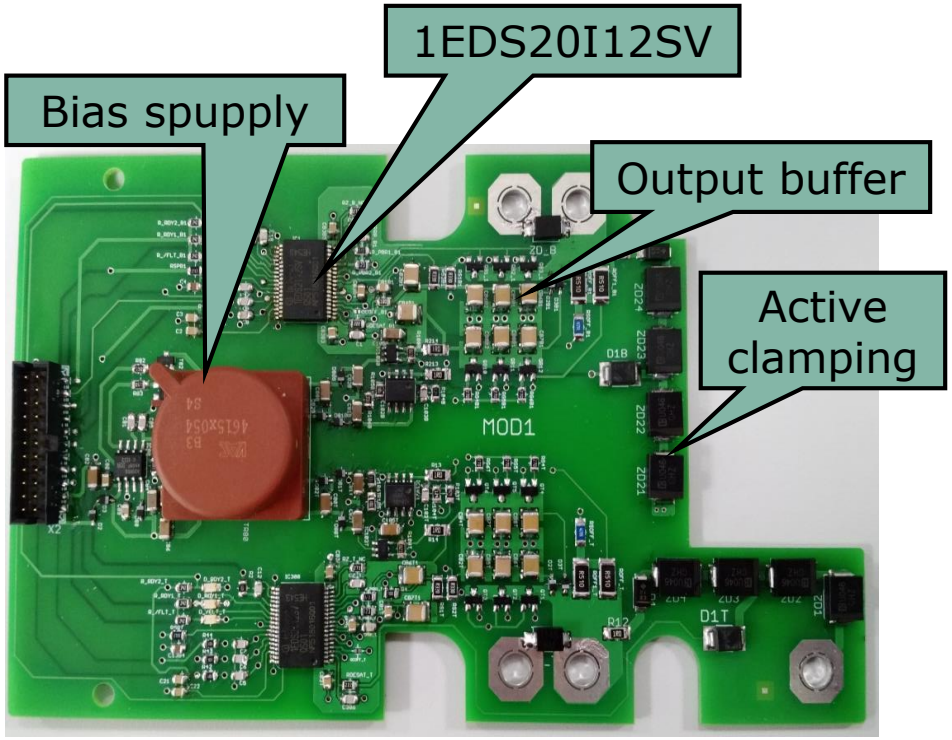

Voltage source (1ED020I12-F2)

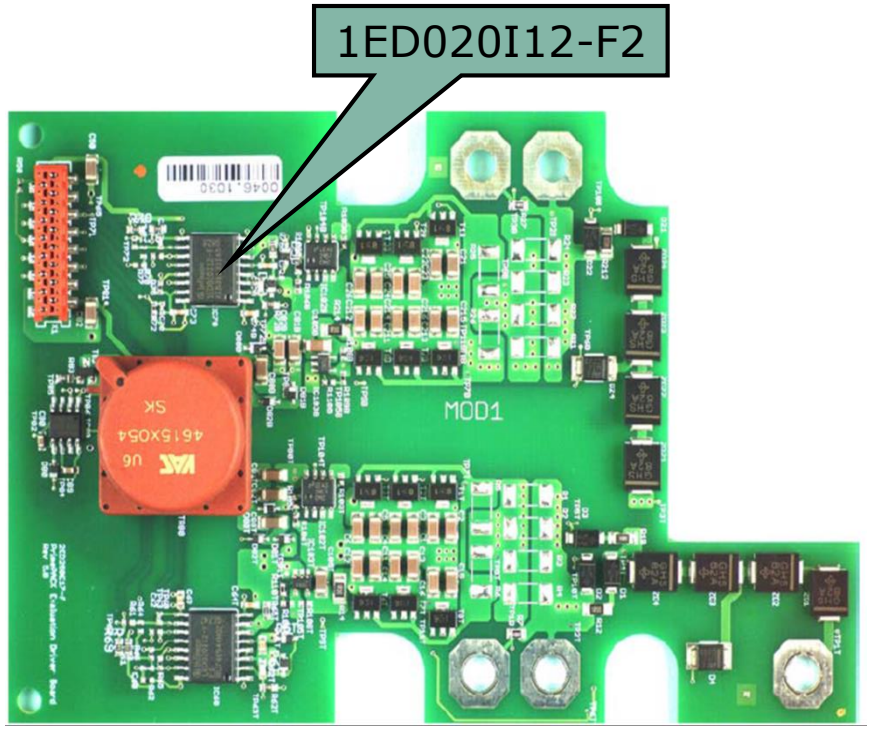

- The same design and layout philosophy applies to both designs
- Approximately the same number of components per board

Agenda

Test bench and test pulse timing

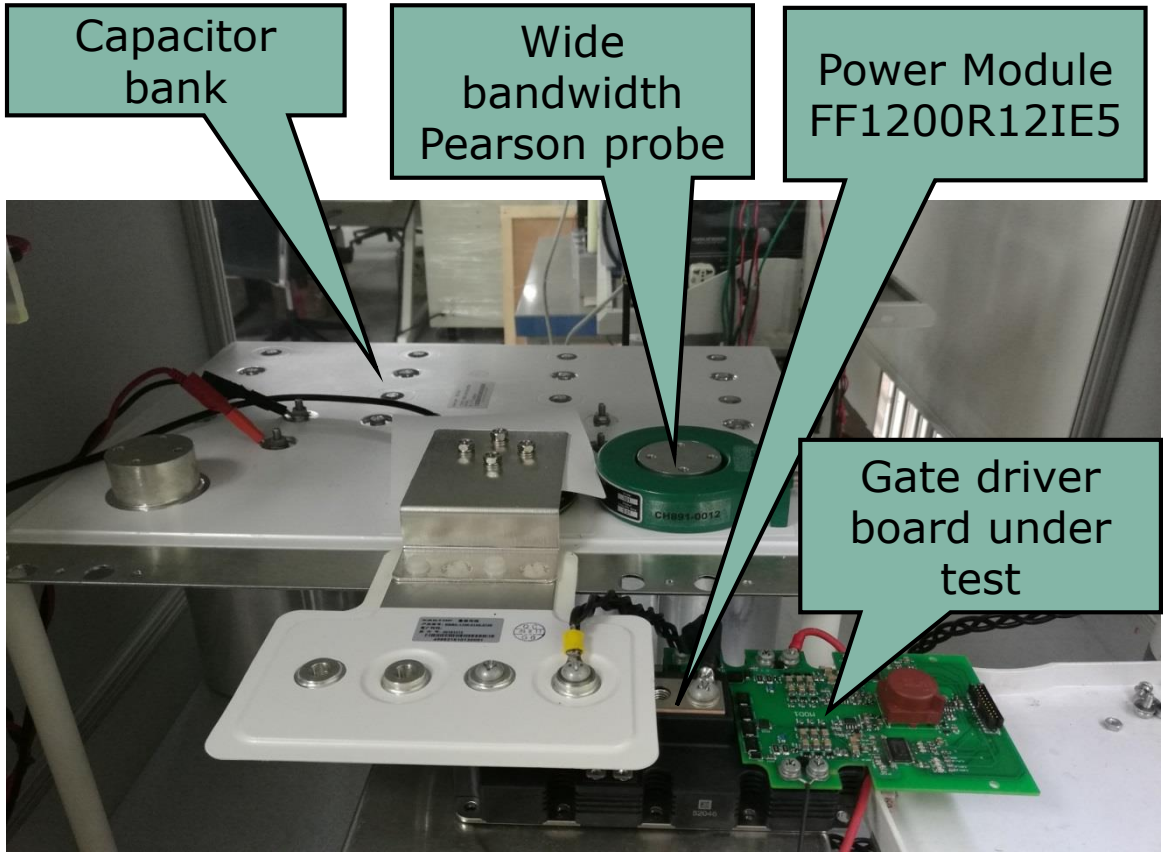

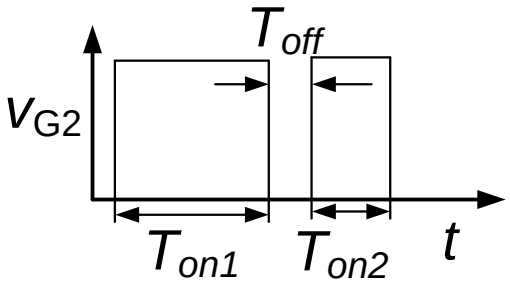

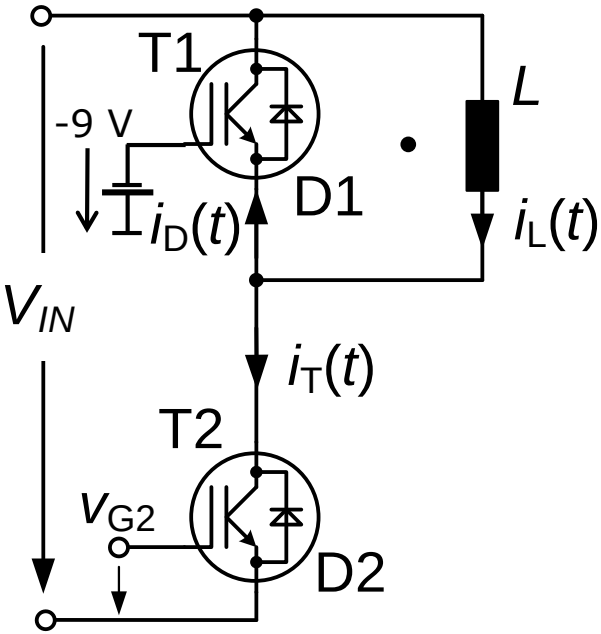

Switching waveform comparison
V_{DC} = 600 V, I_C = 120A, T_{vj} = 25°C

Slow (3 V/ns) | Normal (5 V/ns) | Fast (9 V/ns)

Current source (1EDS20I12SV)

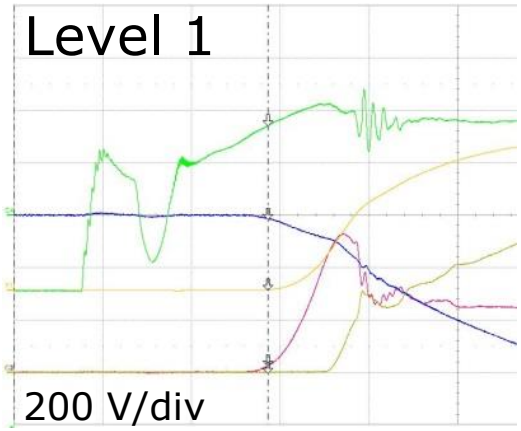

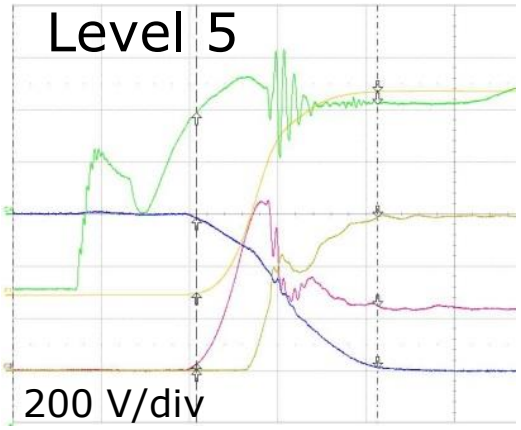

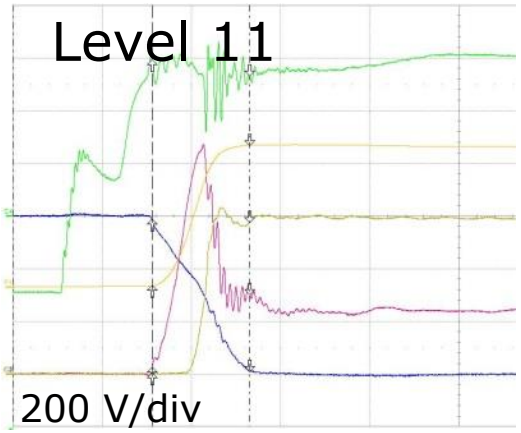

Voltage source (1ED020I12-F2)

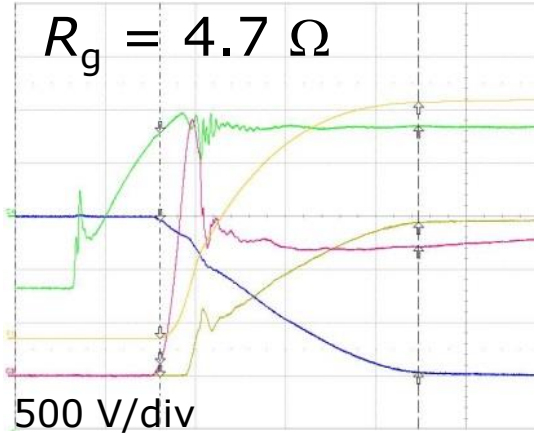

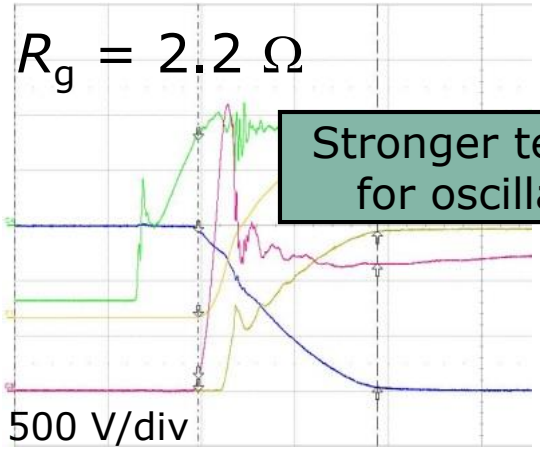

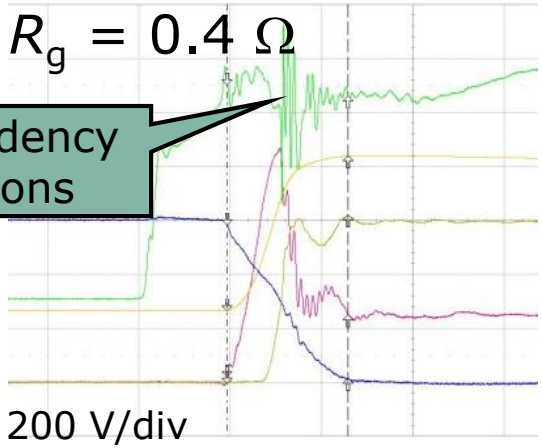

Stronger tendency for oscillations

Commutation speed (dv_F/dt) comparison

Current source (1EDS20I12SV)

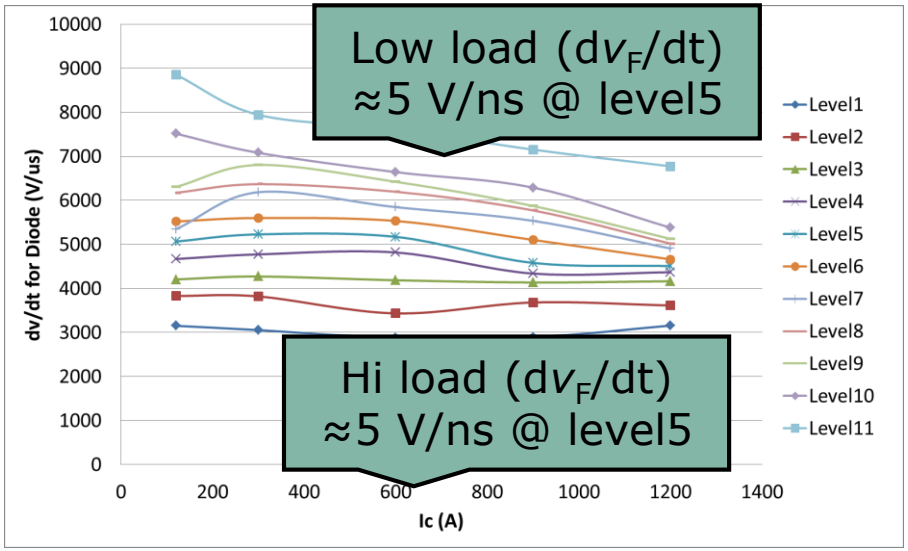

- Current source IC keeps dv/dt constant over load range!
- Easy to obtain test results due to simple change of speed from input side

Voltage source (1ED020I12-F2)

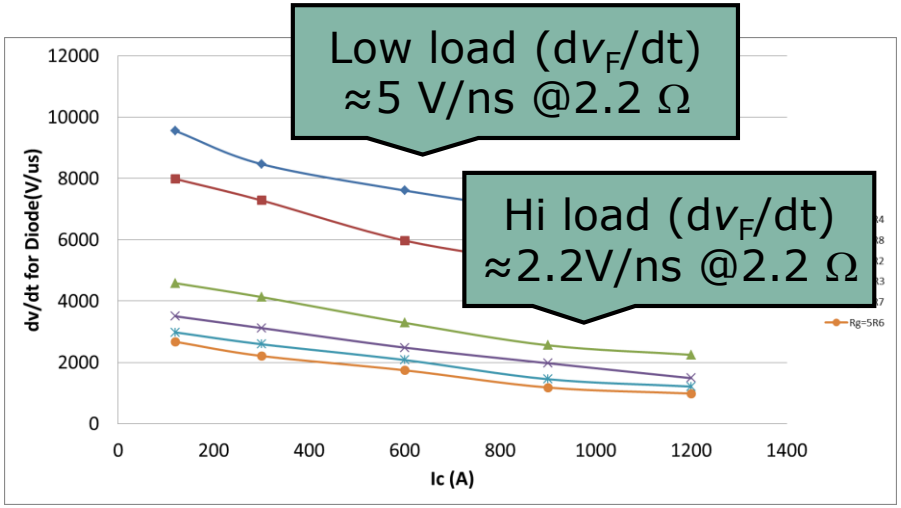

- Speed is a decreasing function because R_{gint} reduces driving voltage, thus the gate current
- Manual change of Rg for every branch of diagram

Turn-on energy E_{on} comparison

Current source (1EDS20I12SV)

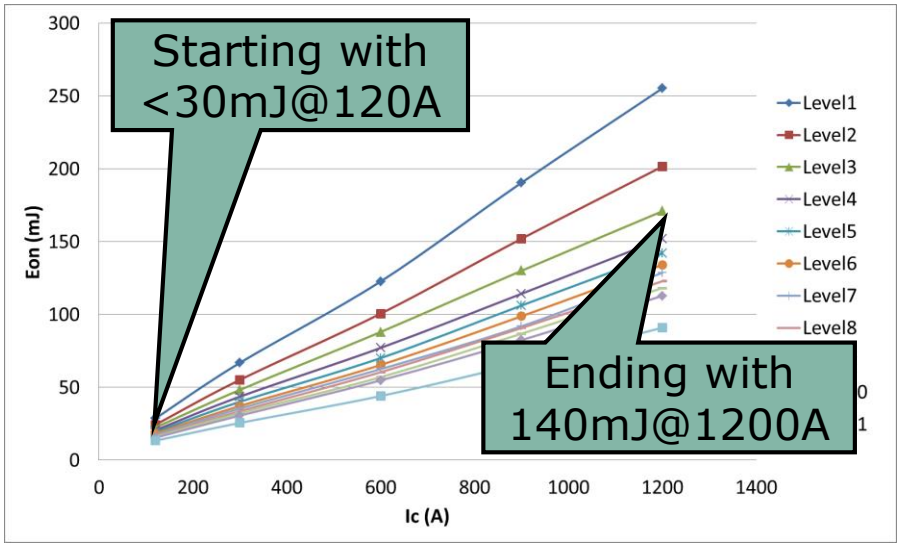

› Turn-on energy is a linear function

Voltage source (1ED020I12-F2)

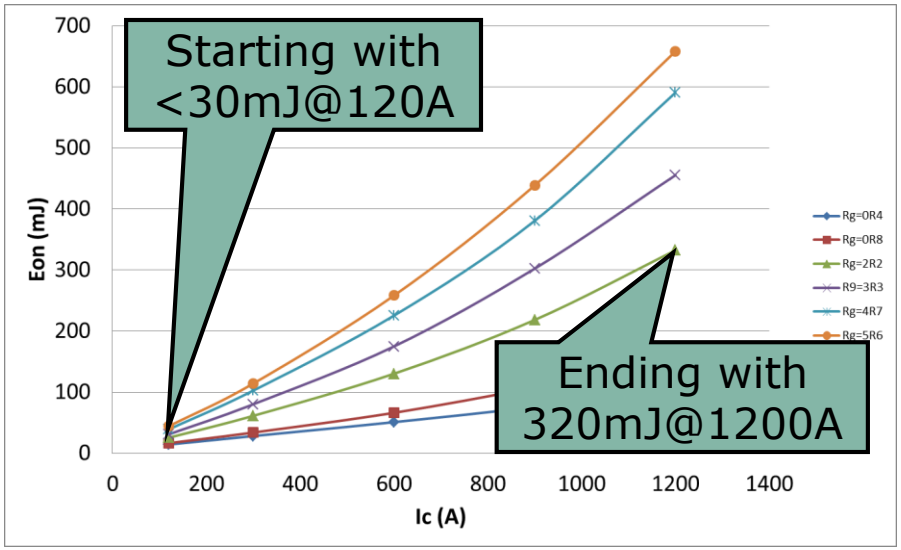

› Turn-on energy is a non-linear function

Current source method has much lower turn-on losses over load range when starting at the same low load condition !

Agenda

Summary

The design effort of schematic and layout is equal for current source and voltage source gate driver boards.

E_{on} at full load (I_{nom}) is less than 50% for the same dv_F/dt condition at low load (1/10 I_{nom}) when using the current source gate driver.

Current source gate drivers such as 1EDS20I12SV overcome parasitic effects which influence the gate drive loop.

Part of your life. Part of tomorrow.