Recent Trends in Design and Techniques to Influence Thermal Performance of Magnetic Components

Prof Peter Wilson

p.r.wilson@bath.ac.uk

UNIVERSITY OF BATH

Magnetic Components are a crucial component in many power electronic systems are intrinsic to the efficient and effective operation of power systems in many applications including in automotive, aerospace, consumer and computing

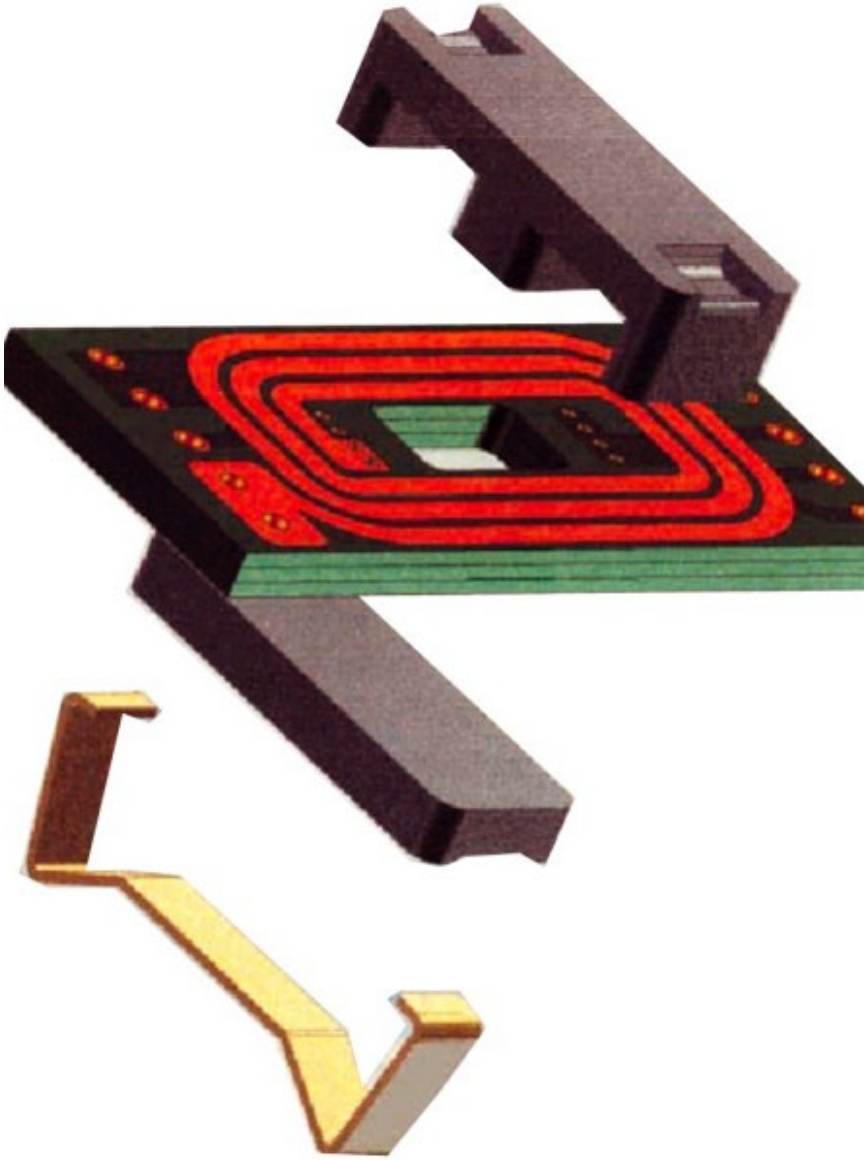

COPYRIGHT P R WILSON 2019

A key aspect of the challenge of working with magnetic components is the variability of the magnetic material behaviour, particularly with respect to temperature.

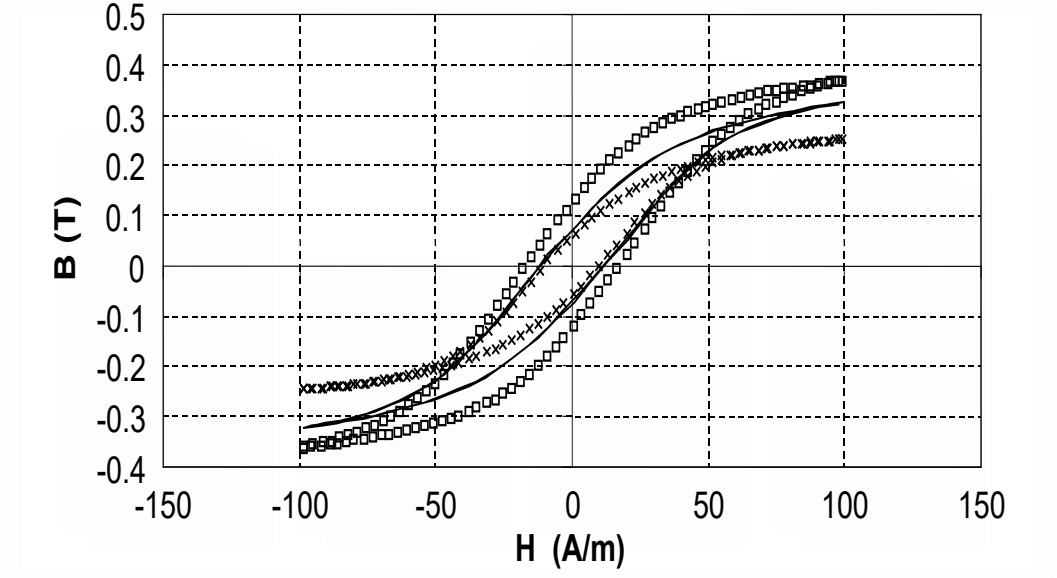

COPYRIGHT P R WILSON 2019

For the last several decades engineers have been perfecting silicon based power electronics using ferrite cores and developing rules of thumb and techniques for modeling magnetic components

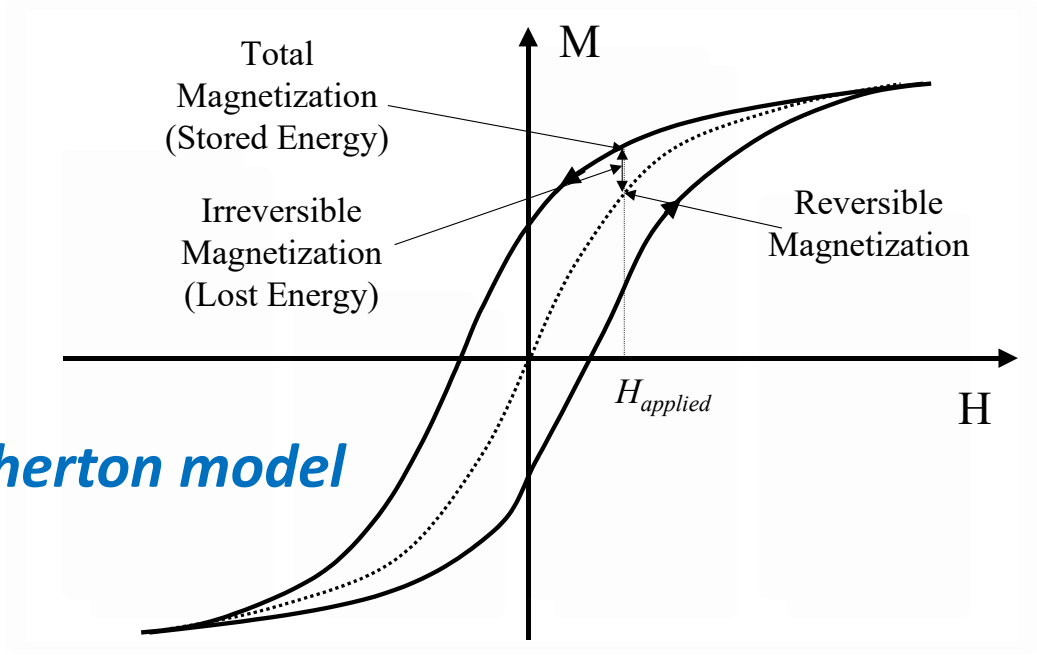

e.g. the famous Jiles-Atherton model

COPYRIGHT P R WILSON 2019

Modeling Magnetic Materials

- ...is particularly complex, with many choices
  - *Jiles Atherton (JA)*
  - *Preisach*
  - *Hodgdon, et al*
- The JA model is often used in circuit simulators
  - *It is relatively simple to model*
  - *Some issues with convergence*
  - *Purely analogue*
  - *Physically based*

But, are they good enough for high frequency and high temperature operation?

Alternatives

- The Preisach model has been around since the 1920s (!)
- It is a more “discrete” model
- It simulates very well and is robust
- But it is difficult to implement in many simulators (it has been in Saber for many years, others more recently)
- It is less “physically based” – difficult to characterize

Jiles Atherton Model

The results are particularly good at predicting the BH loop behaviour in ferrites, however the Preisach model is often better for "square" loop materials

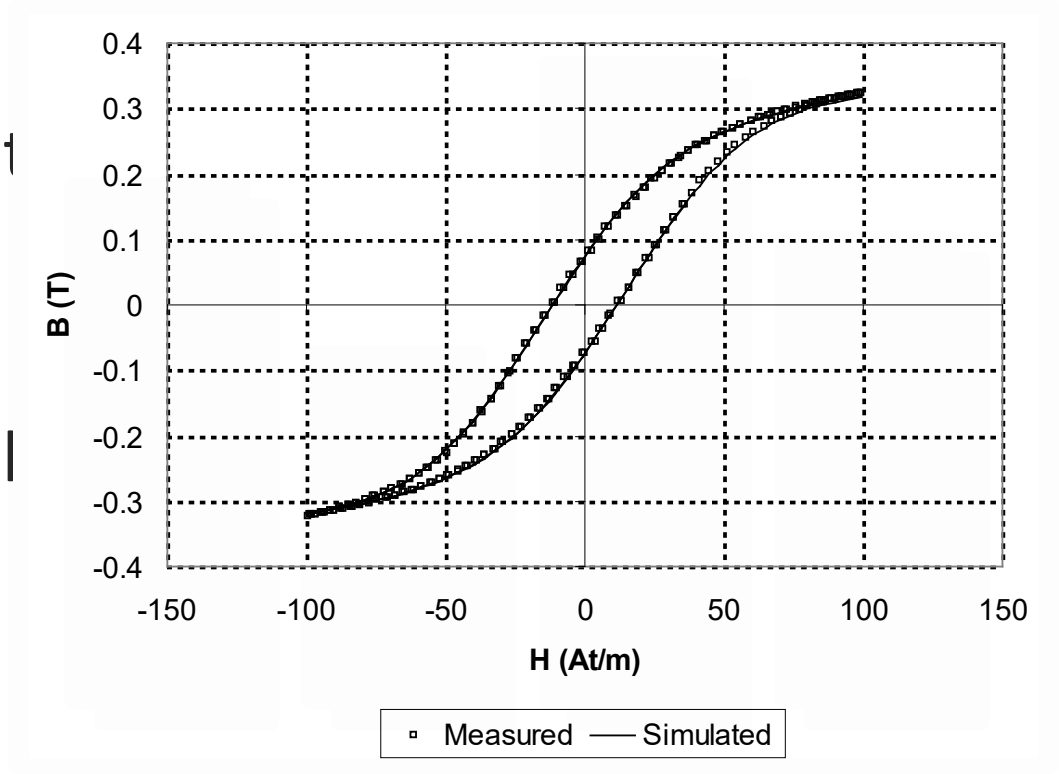

For soft ferrites, it matches very well

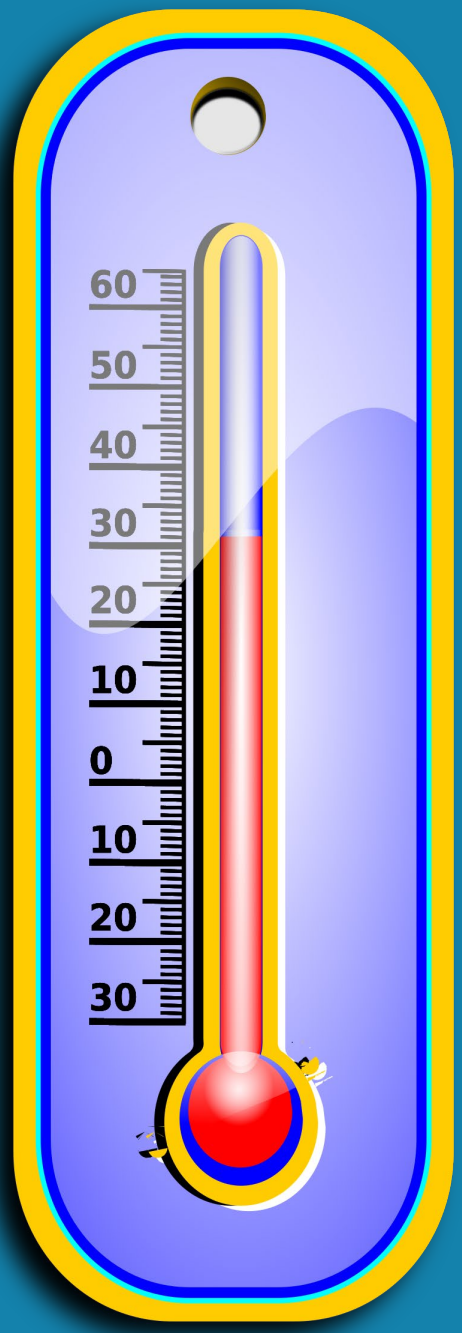

But what about temperature?

COPYRIGHT P R WILSON 2019

Energy Lost in Magnetic Materials

The magnetic material will dissipate energy as heat under heavy loading:

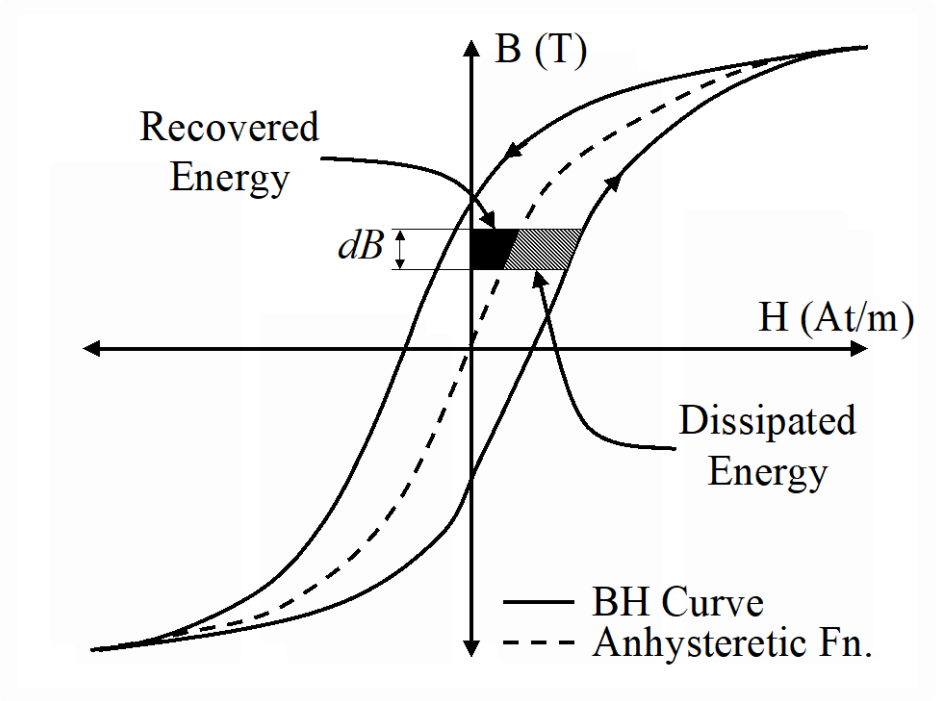

The effect of Temperature?

How does the overall temperature of the material affect its behaviour?

Eventually the Curie point is reached and the material ceases to have any effective permeability

Losses are optimized in Soft Ferrites such as MnZn at around 100°C

It makes a difference…

Data for a 3F3 Material, 10mm Toroid obtained by the author, measured using a Griffin-Grundy oven to control the temperature

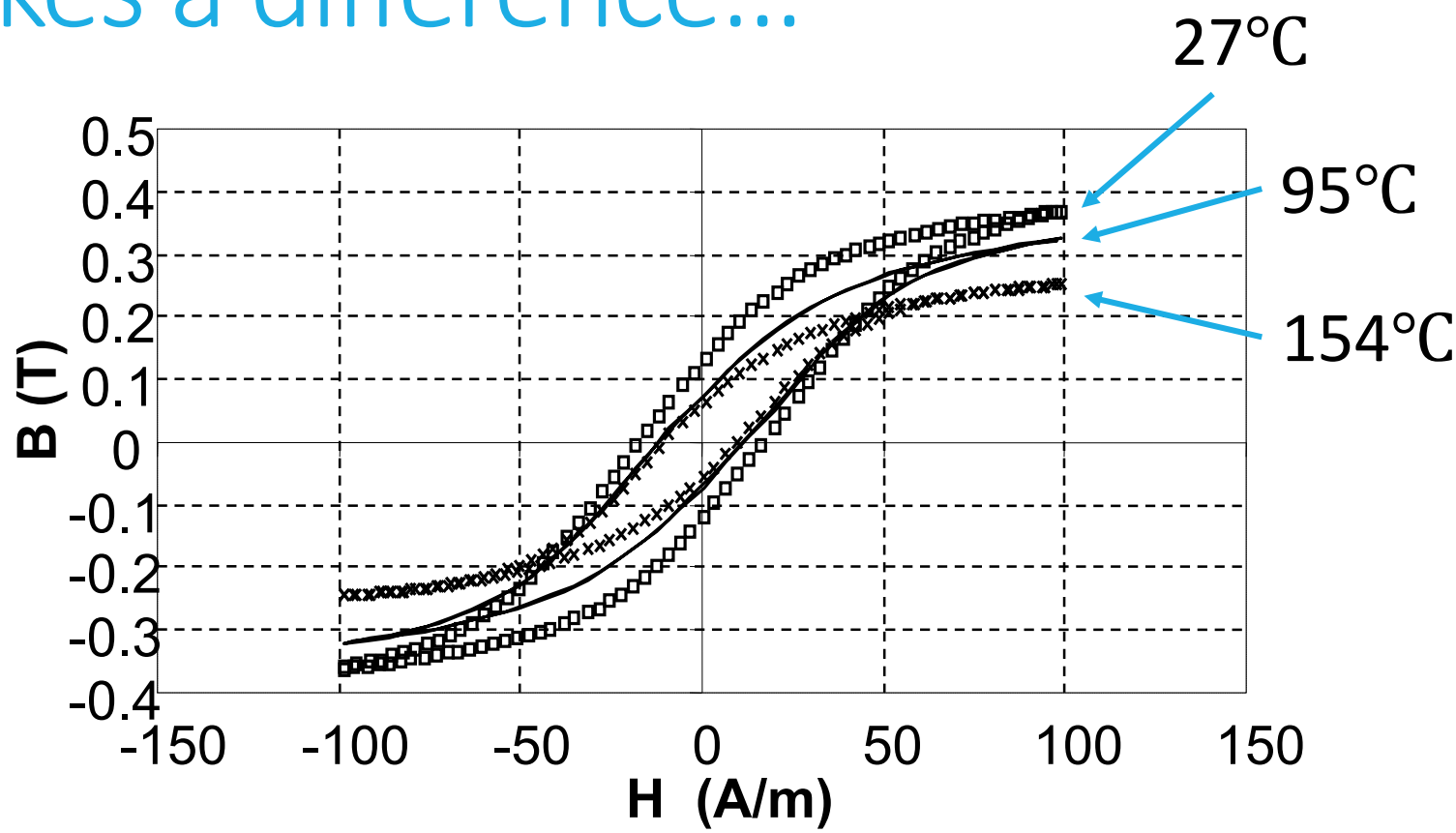

P. R. Wilson and J. N. Ross, "Definition and application of magnetic material metrics in modeling and optimization," in *IEEE Transactions on Magnetics*, vol. 37, no. 5, pp. 3774-3780, Sept. 2001

So how can we design effectively incorporating the temperature into our simulations?

COPYRIGHT P R WILSON 2019

A note…

Magnetic Components are notoriously variable

The magnetic material has a very high variation in parameters

The resulting values of inductance may vary by 10% or more from the calculated value

A model needs to reflect this to be realistic

Building a Magnetic Component

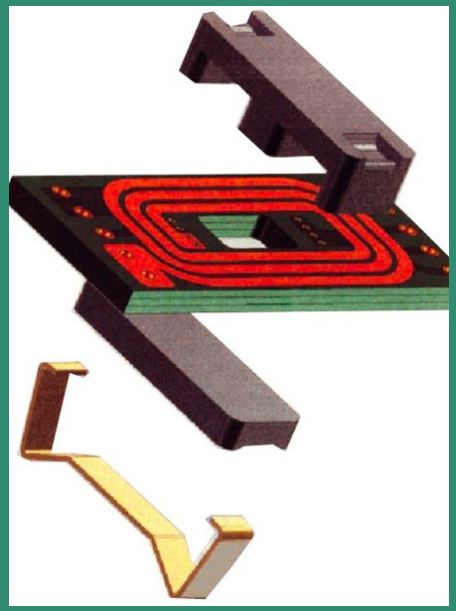

To build a component (e.g. inductor) for electric circuits, we need both a core model and a winding

This is the connection between the electrical and magnetic domains (winding)

The core model can consist of multiple elements representing the various physical elements of a core (legs, plate etc)

Magnetic Model

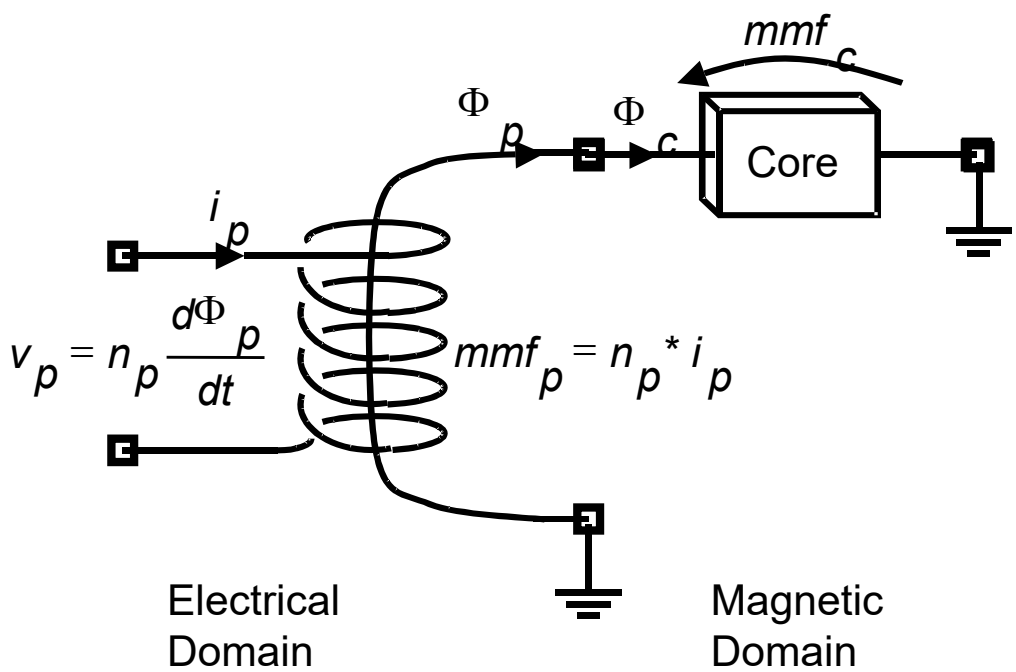

Adding Non-linearity

Jiles and Atherton developed a theory of ferromagnetic hysteresis (1983-1986)

This separates the hysteresis function into the reversible, or anhysteretic, and the irreversible, or loss, magnetizations

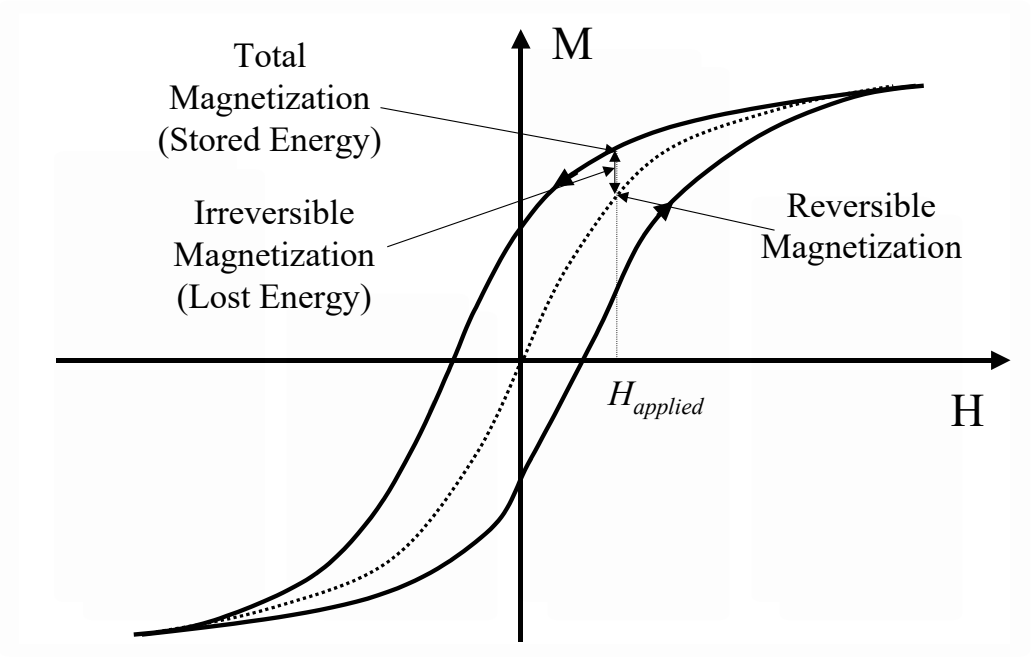

Jiles-Atherton Model

The total lumped magnetization as derived by Jiles and Atherton is given by:

$$M_{TOTAL} = M_{IRREVERSIBLE} + M_{REVERSIBLE}$$

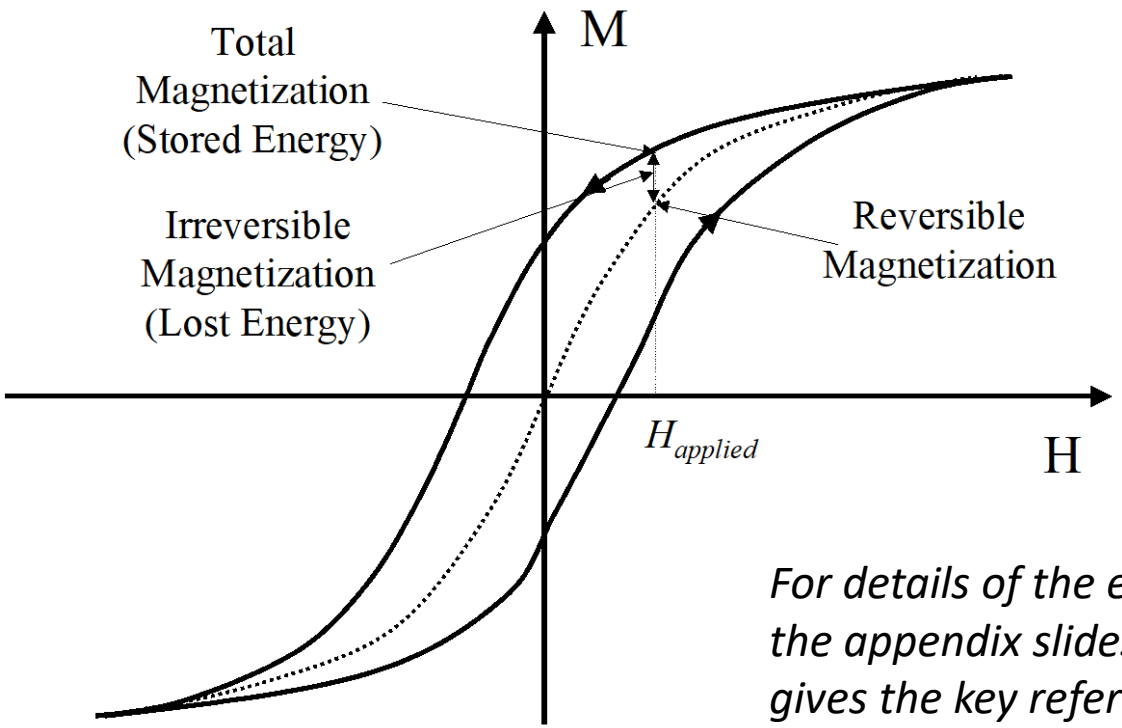

For details of the equations see the appendix slides, this also gives the key references

Avoiding problems

Implementing the nonlinear equations for the Jiles-Atherton model highlight a number of issues

Taking the Langevin equation it can be seen that for small values of magnetic field strength

- there will be an issue when H approaches zero
- leading to an infinite value of magnetization

Most implementations use a small linear region close to the origin, such that the potential divide by zero error is avoided.

Adding the Thermal Dependence

To add dynamic thermal behaviour, use a network to effectively model the thermal aspects of the material and the environment

Link the thermal behaviour to an additional set of thermal components

Thermal Dependence

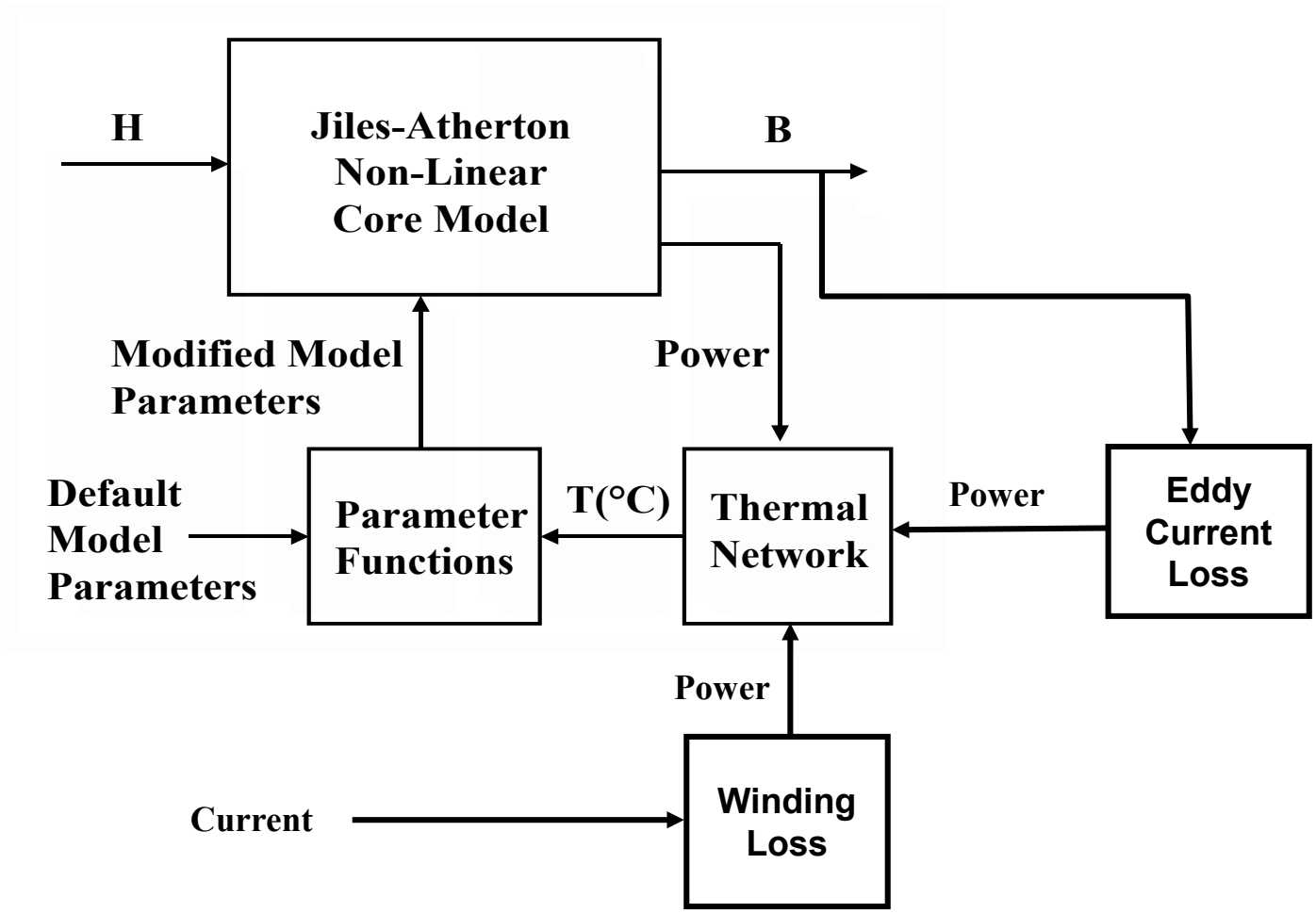

Thermal Network Modeling

We have choices to make regarding the thermal network, in particular a distributed or lumped model

In most cases a lumped model is perfectly adequate

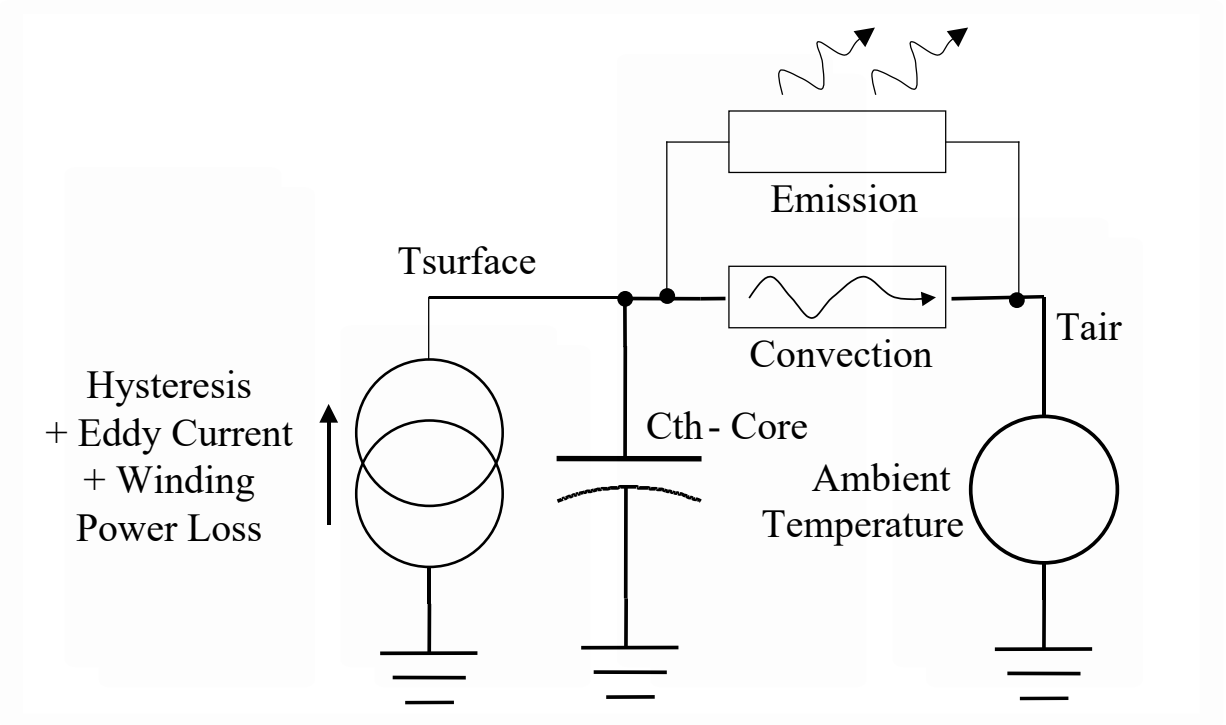

Characterize the Magnetic Material

It is a relatively simple matter to characterize the magnetic material model by measuring its behaviour and calculating the resulting model parameters

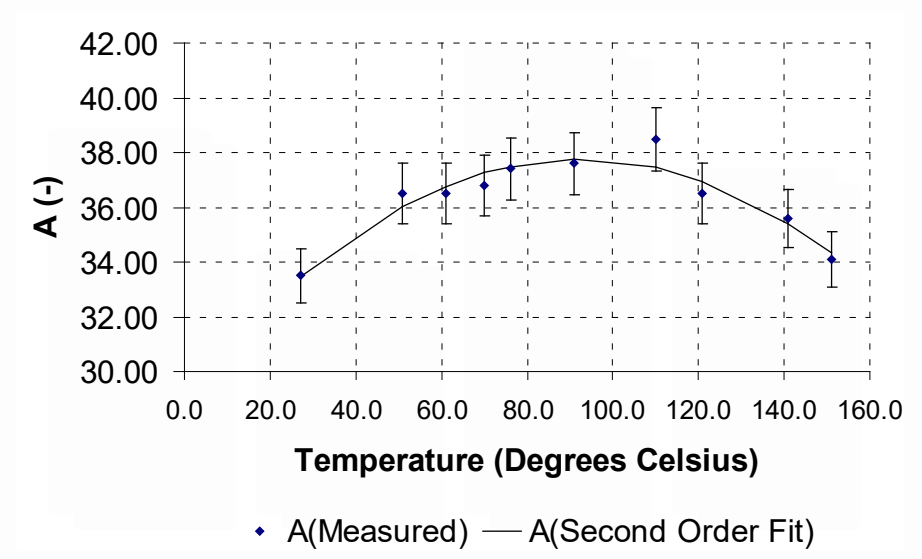

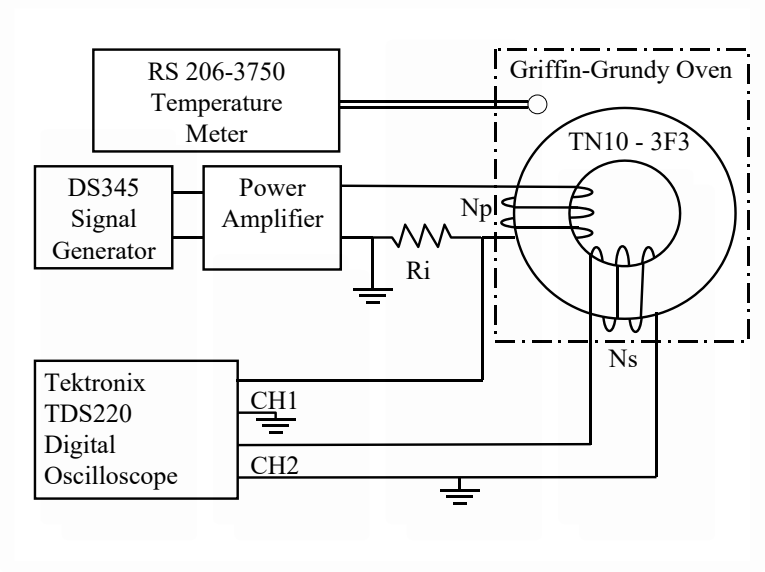

Building a Circuit Model…

Using the characterized thermally dependent model of the core, winding models and a thermal network, we can make the electric circuit model (in this case a transformer) *dynamically* affected by temperature

Transformer model

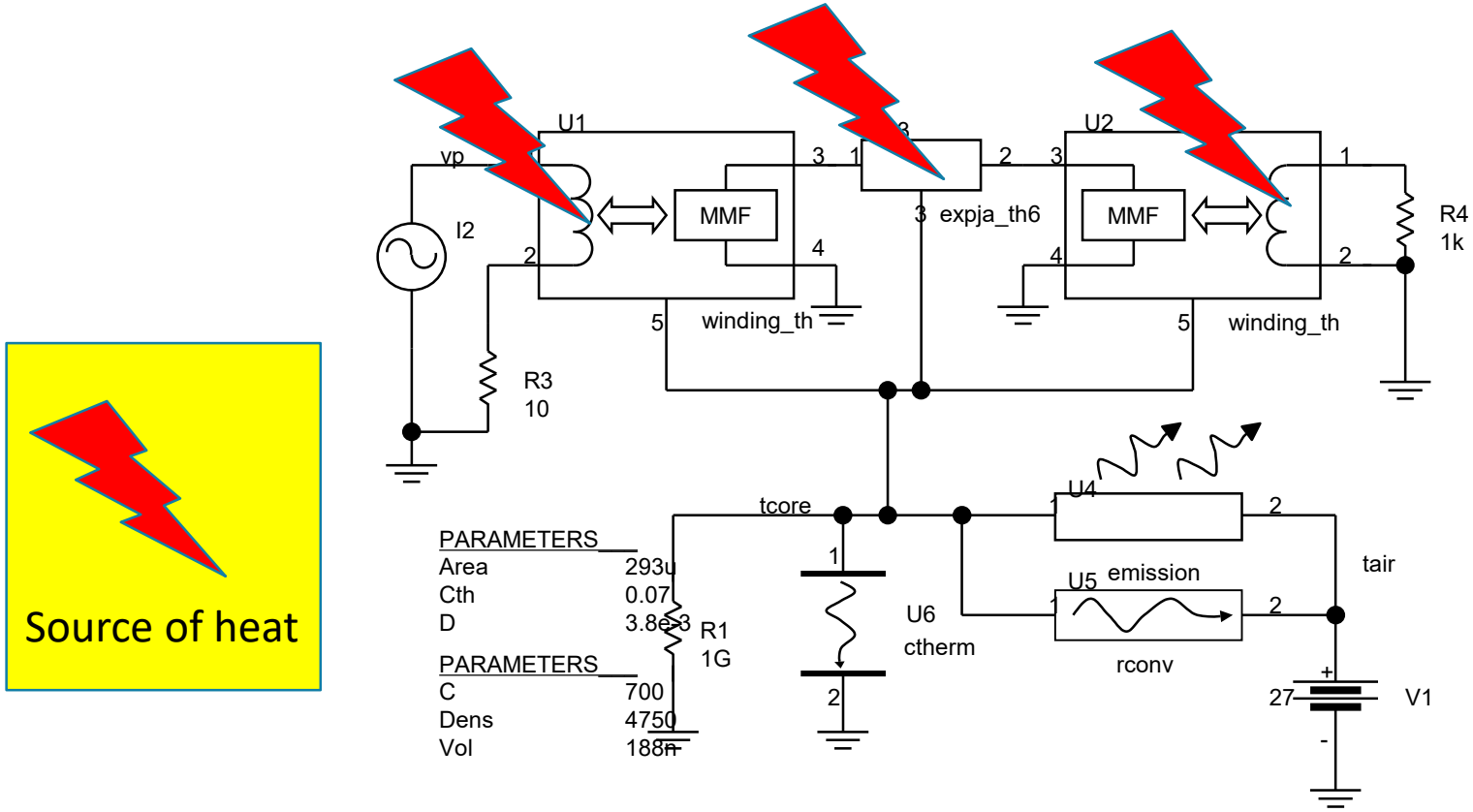

Remember we also need to include the heating effect due to the windings
This is also frequency dependent and must consider eddy currents

Results

At ambient Temperatures, the model behaves very closely to the measured data

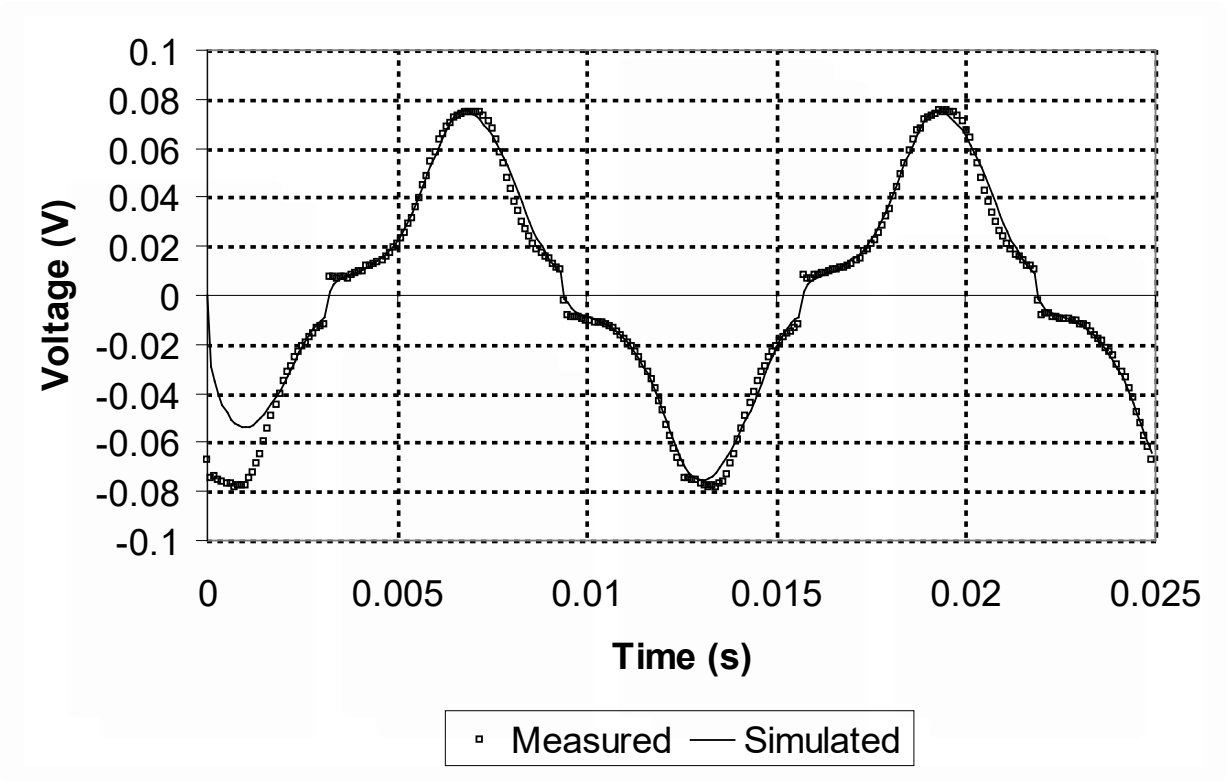

Results

At increased temperatures, the transformer output voltage drops due to reduced permeability

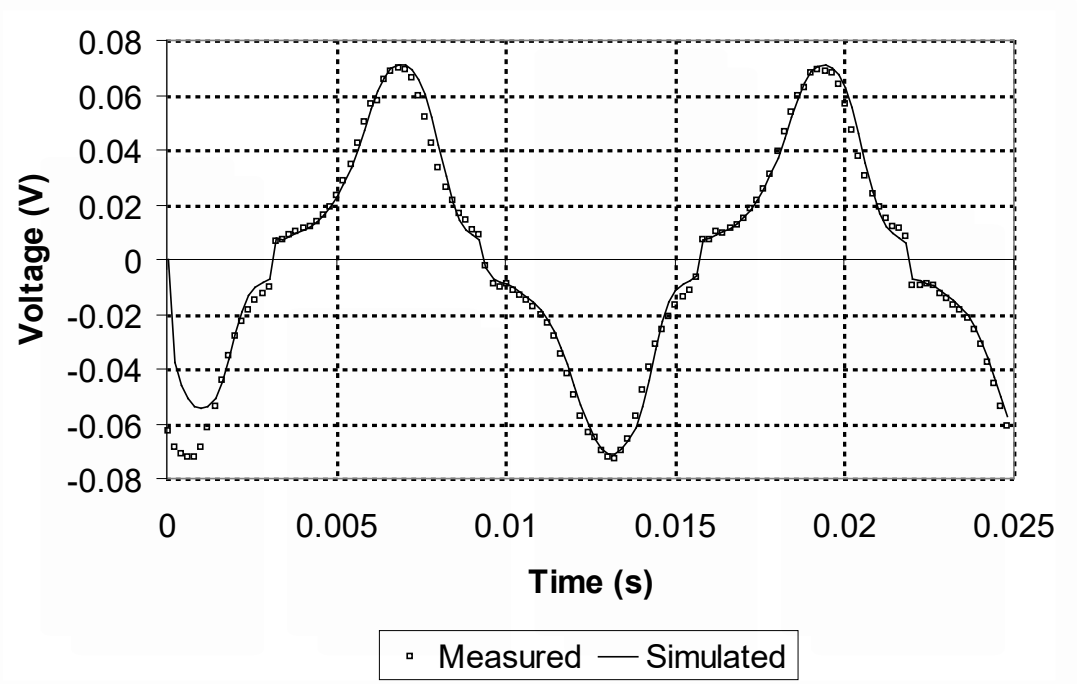

P. R. Wilson, J. N. Ross and A. D. Brown, "Simulation of magnetic component models in electric circuits including dynamic thermal effects," in *IEEE Transactions on Power Electronics*, vol. 17, no. 1, pp. 55-65, Jan. 2002.

More recent work

Has enhanced the dynamic magnetic behavior by extending the magnetic-thermal equations into two parts:

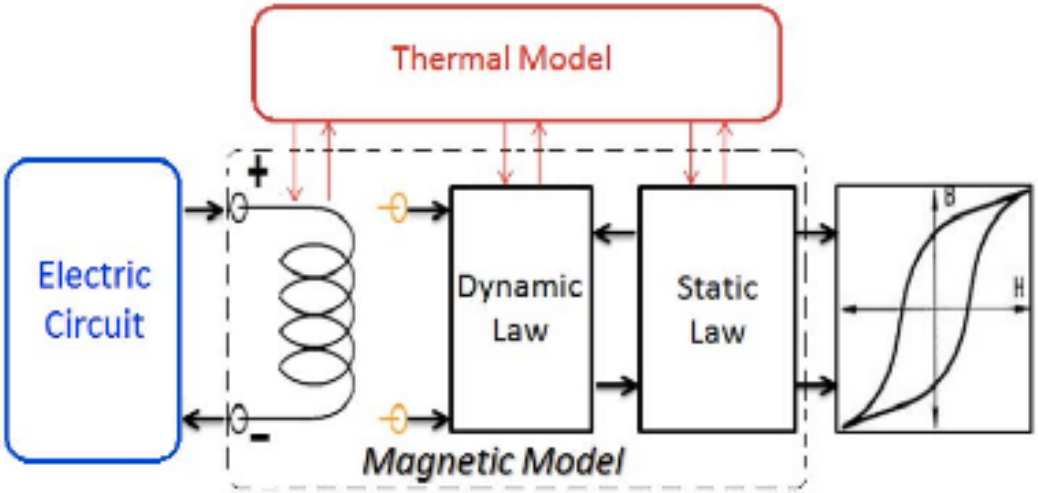

A. Hilal, M. A. Raulet and C. Martin, "Magnetic Components Dynamic Modeling With Thermal Coupling for Circuit Simulators," in *IEEE Transactions on Magnetics*, vol. 50, no. 4, pp. 1-4, April 2014

COPYRIGHT P R WILSON 2019

How to optimize the model parameters?

We can use holistic techniques such as Genetic Algorithms to solve multiple dimension parameter characterization problems

Genetic algorithms

Mimic nature's best bits…

Details of the GA process are given in the additional slides

Genetic Algorithms (GA)

GAs are a type of **stochastic search**.

They can be used when gradient searches can not be applied.

They are particularly useful for **combinational problems** (trying different configurations).

Genetic Algorithms are search algorithms based on **evolution**. Darwinian survival of the fittest.

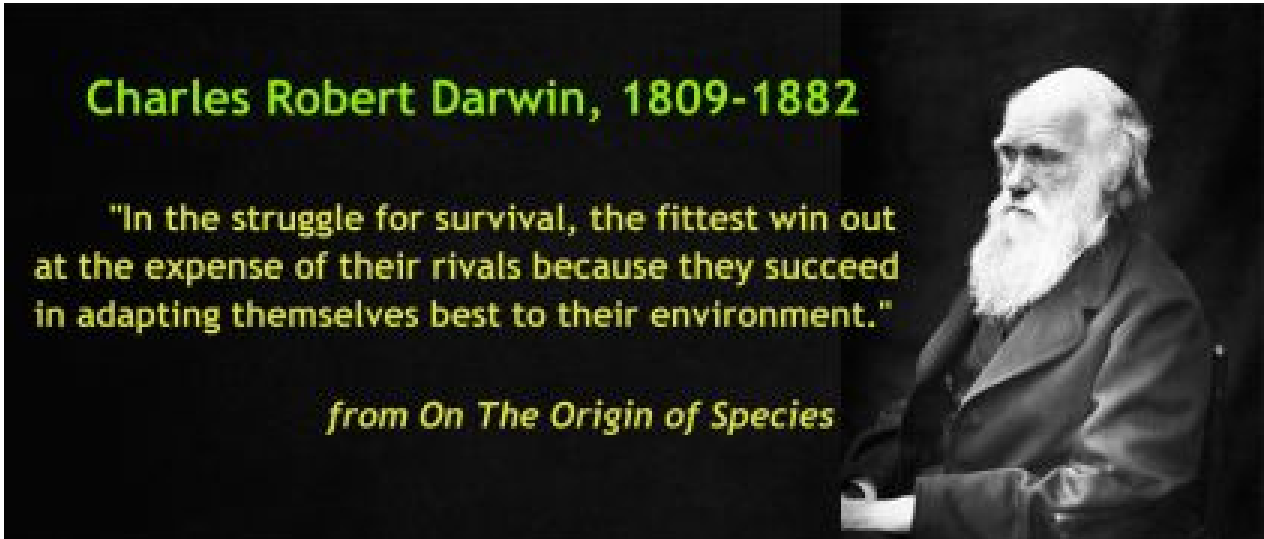

Apply optimization characterize parameters for magnetic materials

Parameter	GA (JA)	GA (JA Modified)	SA (JA)	SA (JA Modified)
a	13.8	**9.29**	7.26	6.96
c	0.799	**0.497**	0.150	0.308
k	11.01	**12.67**	7.19	11.176
alpha	6.78e-6	**29.1e-6**	4.29e-6	4.54e-6
Ms	293318	**268562**	264500	257479
sigma	-	**16.55**	-	15.54
Error	0.1416	**0.019**	0.188	0.035

P. R. Wilson, J. N. Ross and A. D. Brown, "Optimizing the Jiles-Atherton model of hysteresis by a genetic algorithm," in *IEEE Transactions on Magnetics*, vol. 37, no. 2, pp. 989-993, March 2001

COPYRIGHT P R WILSON 2019

Interesting points to note

There was no convergence of parameters

This implies a multiple solution space, or perhaps no global minimum found

Recent work has shown that we need to be careful using machine learning techniques to obtain optimized parameters:

- They may not be physically realistic
- They may be very sensitive to error

Always better to have a physical understanding of what is going on, even if only to calibrate or “seed” an algorithm

COPYRIGHT P R WILSON 2019

State of the Art circa 2010

Silicon Devices well understood

Frequency performance constrained

Voltages on devices limited in most cases to below ~800V

On resistances relatively large

dV/dt switching rates under control

Magnetic components design techniques and tools in place

Good materials available for “high” frequency operation

…All is well….

COPYRIGHT P R WILSON 2019

Then along came wide band gap devices….and changed everything…

COPYRIGHT P R WILSON 2019

SiC/GaN Properties

- SiC and GaN both have ~**10x higher E_{crit} than Si**
- Electron saturation velocity ~ 2x higher.
- GaN electron mobility is a little better than Si,
  - SiC a little worse.
- SiC has significantly better thermal conductivity.

$$V_{br} = \frac{\varepsilon . Ec^2}{2qNd}$$

Materials Property	Si	SiC	GaN
Critical Field (E_c) x10^7V/m	3	30	35
Electron Mobility (cm^2/V-sec)	1450	900	2000
Electron Saturation Velocity (x10^6 cm/sec)	10	22	25
Thermal Conductivity (Watt/cm^2 K)	1.5	5	1.3

COPYRIGHT P R WILSON 2019

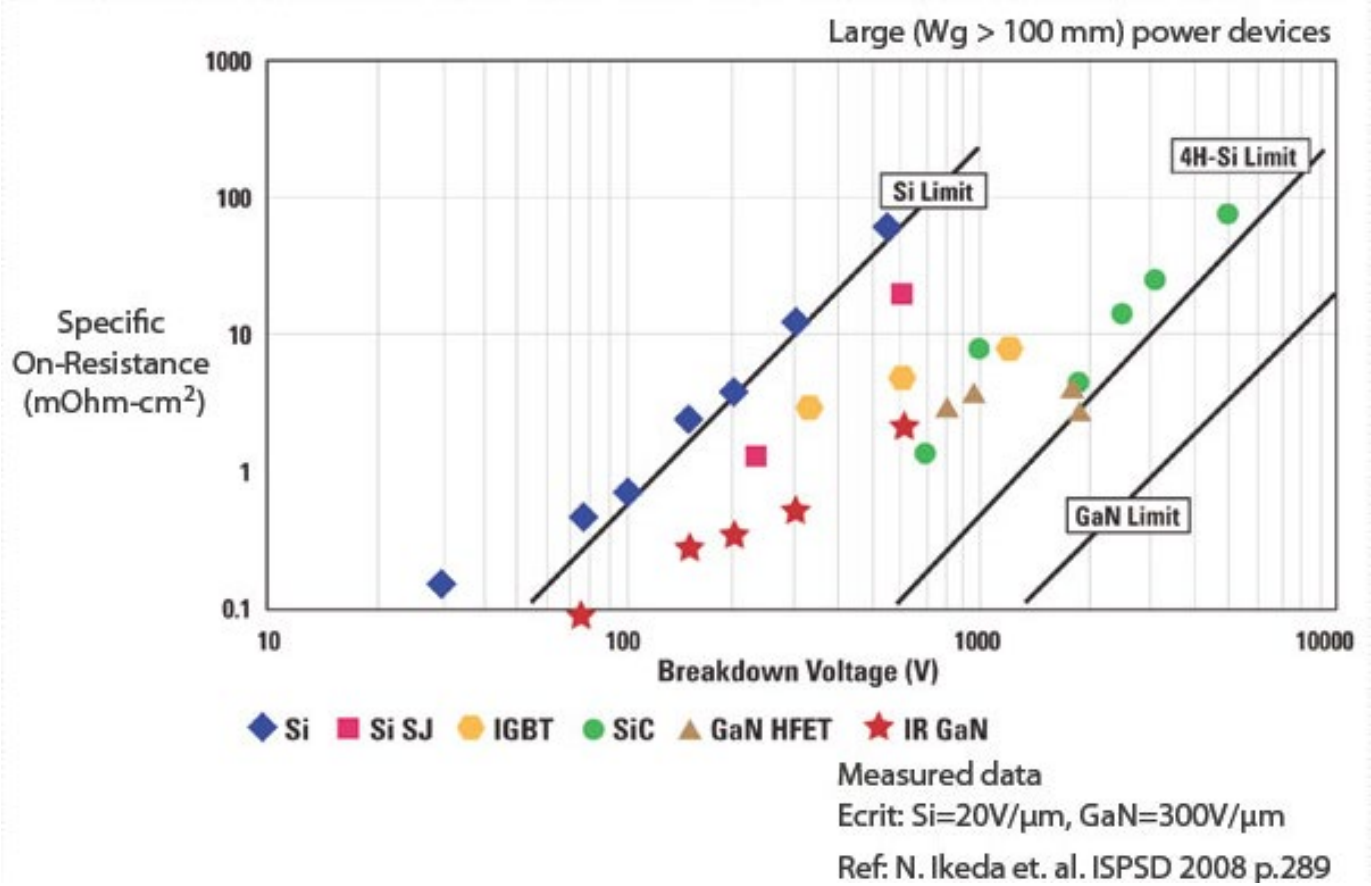

Seismic Shift in breakdown voltage and on resistances

COPYRIGHT P R WILSON 2019

We must look at SiC and GaN differently…

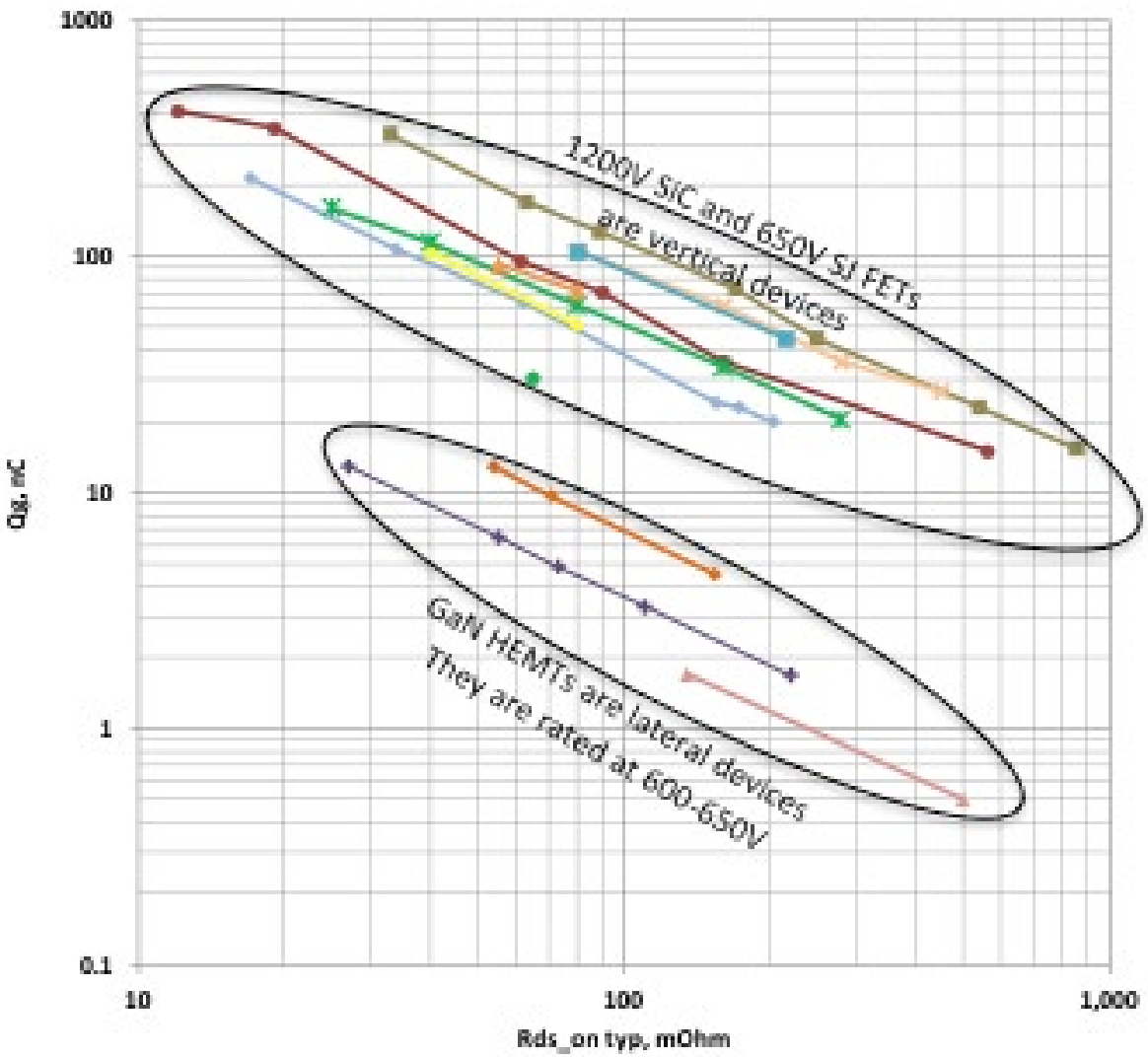

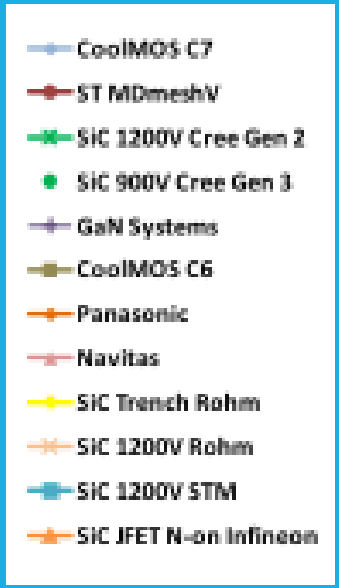

Roadmap to Unlocking Full Potential of GaN in Power Conversion Applications
David Sanderlin et al, IEEE PELS Magazine, June 2018

COPYRIGHT P R WILSON 2019

What does this mean for us?

Higher Voltages 1200V, 1700V

Faster Switching Speeds – higher switching frequencies

Higher dV/dt – transients?

<u>All issues for the power electronics designer to manage in magnetics design</u>

COPYRIGHT P R WILSON 2019

Consider a simple Buck converter

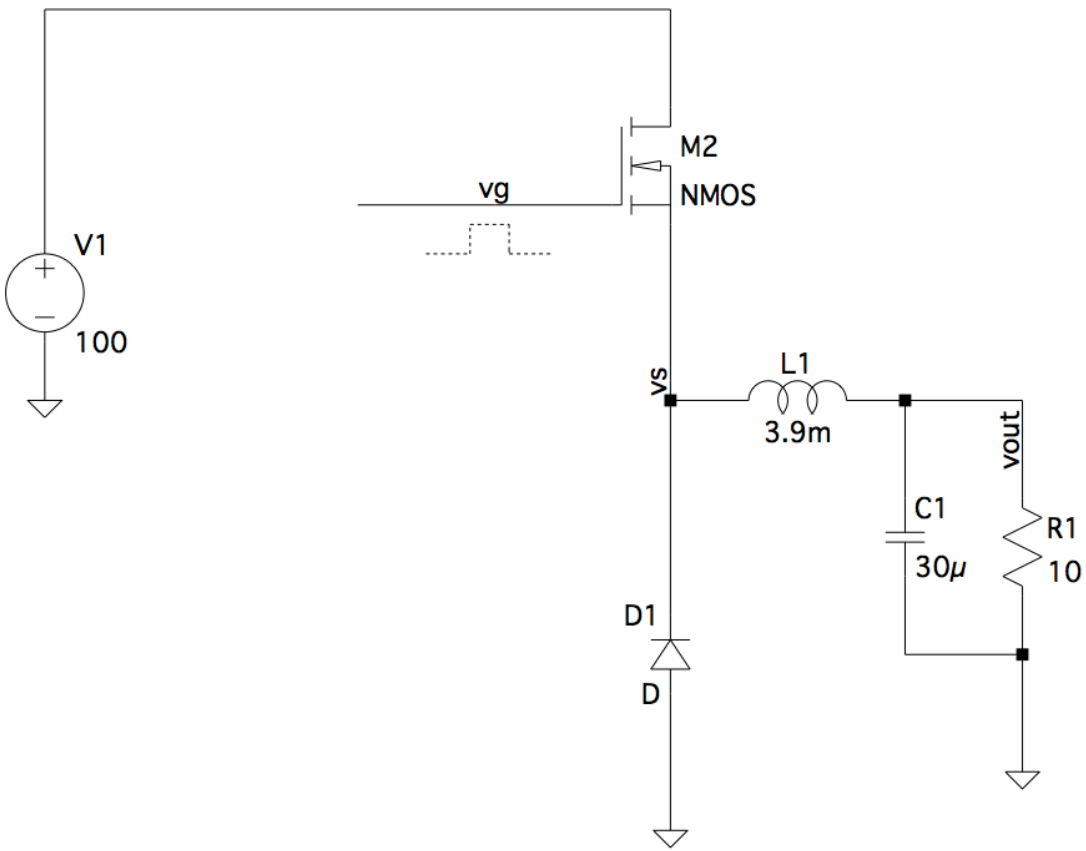

COPYRIGHT P R WILSON 2019

No lead inductances – V_s clean

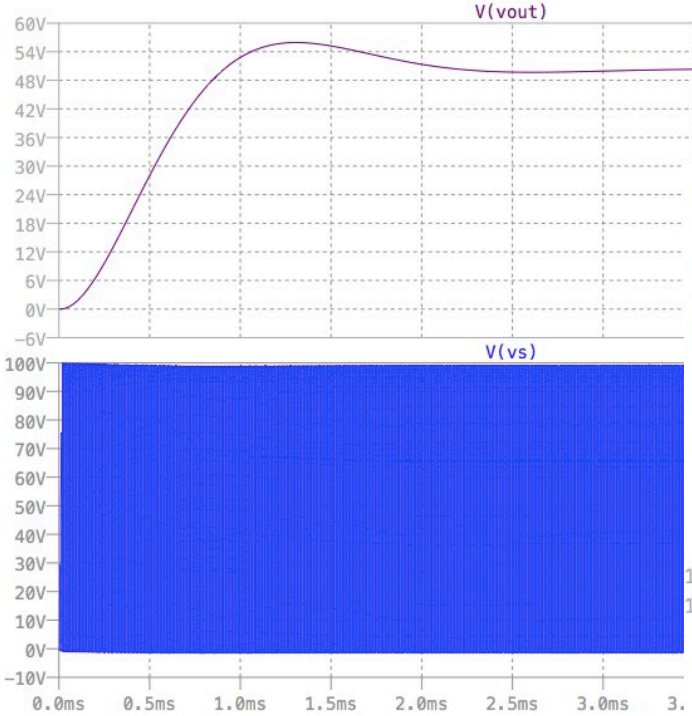

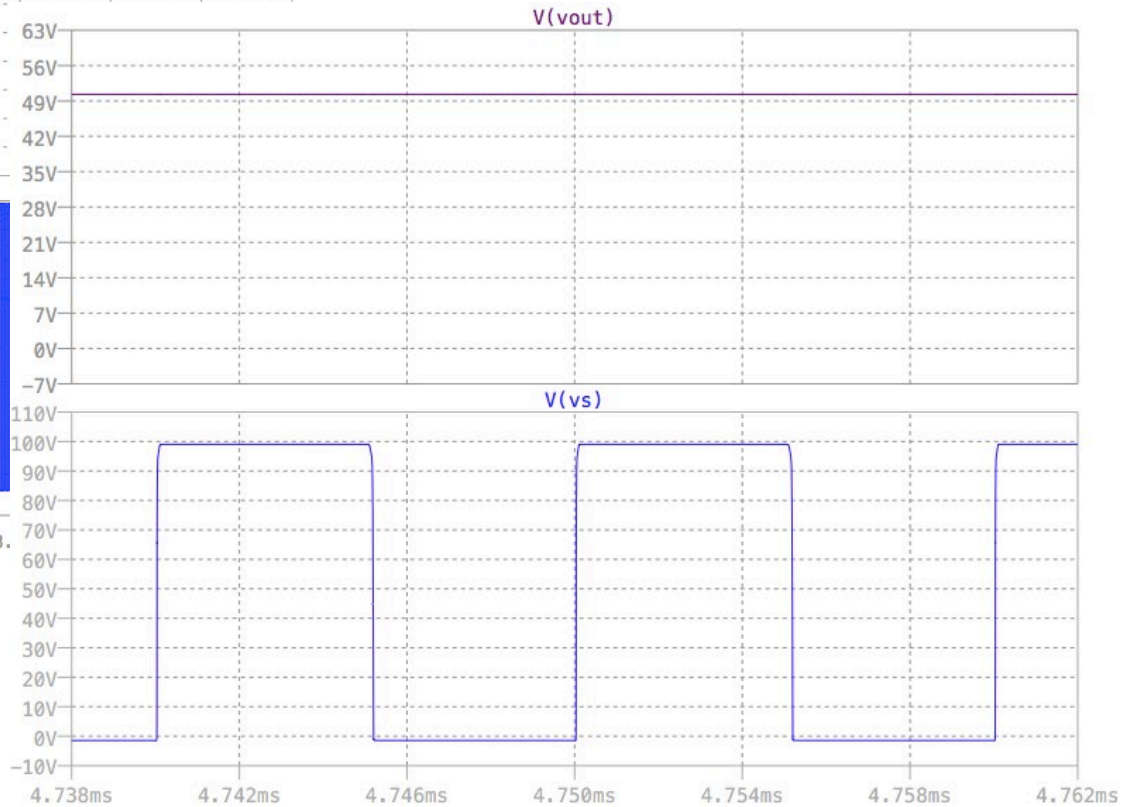

COPYRIGHT P R WILSON 2019

Add parasitics – a different story!

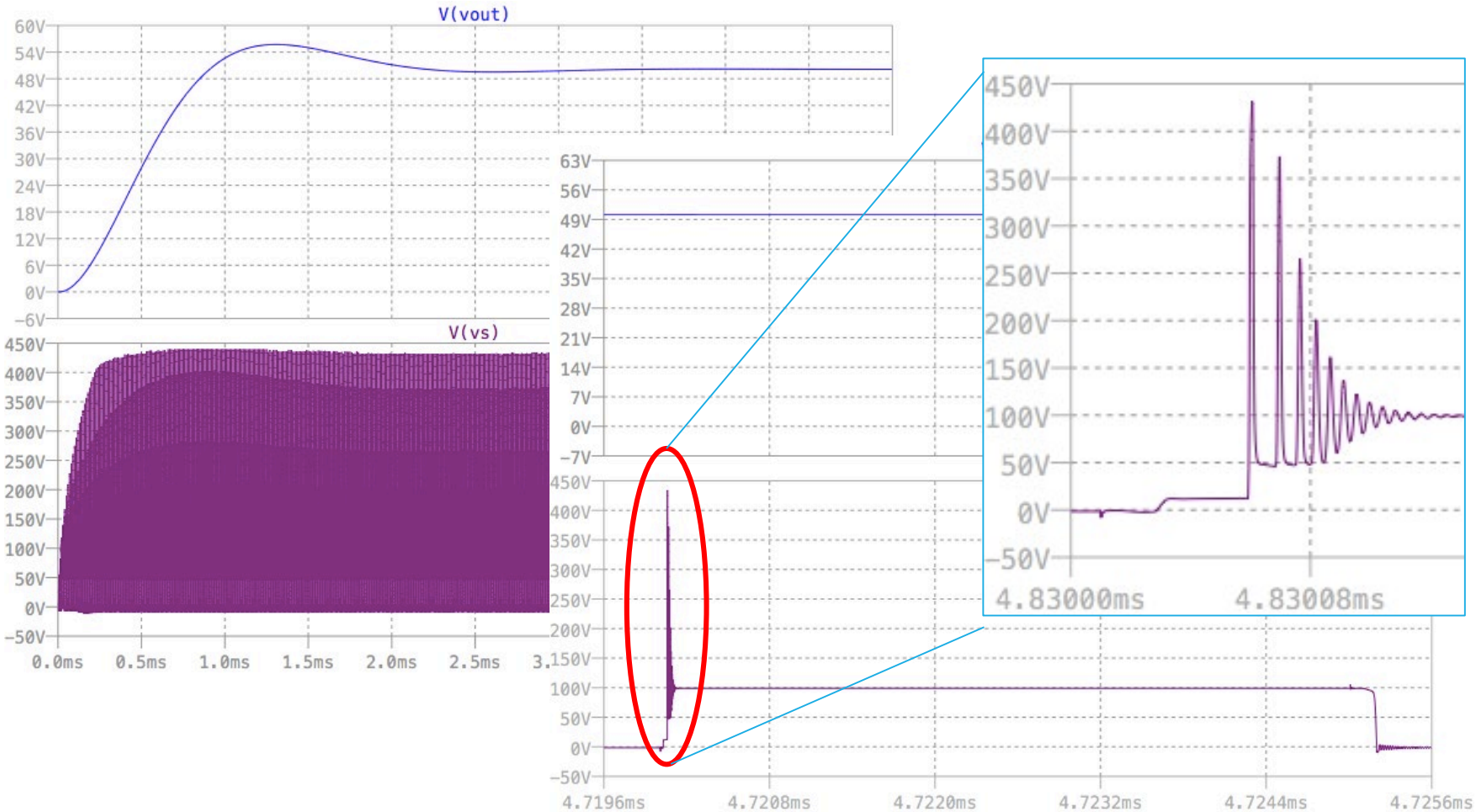

COPYRIGHT P R WILSON 2019

Where does this high frequency noise go => to the inductor

Can result in excessive eddy currents – heat/noise

Need a snubber network to clean this up

Horrendous for EMI!

Simple RC snubber makes a huge difference

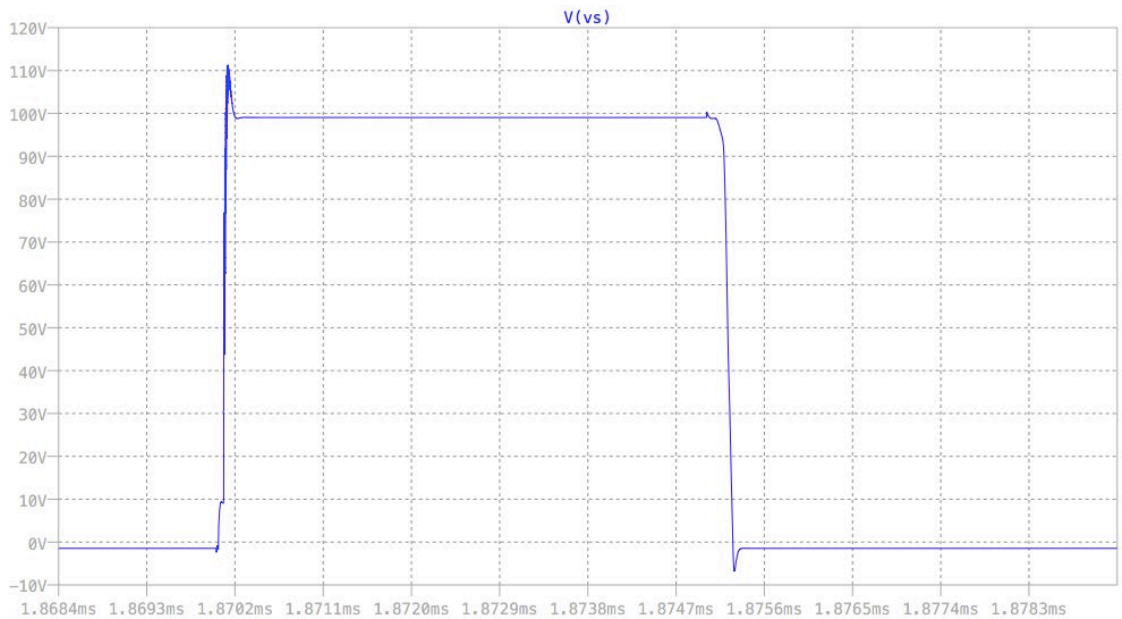

COPYRIGHT P R WILSON 2019

Thermal Tolerance

Silicon Carbide works very well at high temperatures

This sounds great – except everyone else now has to operate there as well…

Particularly problematic for passive components

Materials Property	Si	SiC	GaN
Critical Field (E_c) x10^7V/m	3	30	35
Electron Mobility (cm^2/V-sec)	1450	900	2000
Electron Saturation Velocity (x10^6 cm/sec)	10	22	25
Thermal Conductivity (Watt/cm^2 K)	1.5	5	1.3

COPYRIGHT P R WILSON 2019

Predicting Performance with WBG devices

Simulation is still valid, but new models are available to provide more accurate behavior – essential for effective magnetic component design and assessment in the circuit context

H. A. Mantooth, K. Peng, E. Santi and J. L. Hudgins, "Modeling of Wide Bandgap Power Semiconductor Devices—Part I," in IEEE Transactions on Electron Devices, vol. 62, no. 2, pp. 423-433, Feb. 2015.

E. Santi, K. Peng, H. A. Mantooth and J. L. Hudgins, "Modeling of Wide-Bandgap Power Semiconductor Devices—Part II," in IEEE Transactions on Electron Devices, vol. 62, no. 2, pp. 434-442, Feb. 2015.

X. Li et al., "A SiC Power MOSFET Loss Model Suitable for High-Frequency Applications," in IEEE Transactions on Industrial Electronics, vol. 64, no. 10, pp. 8268-8276, Oct. 2017.

COPYRIGHT P R WILSON 2019

Transients => Eddy Currents

Now a **serious** problem for the magnetics designer (*Although we have known about these effects for a while…*)

- Conductors
- Ferrite materials
- Frequencies >> 1MHz

P. L. Dowell, "Effects of eddy currents in transformer windings", *Proc. Inst. Elect. Eng.*, vol. 113, no. 8, pp. 1387-1394, Aug. 1966.

Charles R. Sullivan, "Computationally Efficient Winding Loss Calculation with Multiple Windings Arbitrary Waveforms and Two-Dimensional or Three-Dimensional Field Geometry", *IEEE Transactions on Power Electronics*, vol. 16, no. 1, Jan 2001

COPYRIGHT P R WILSON 2019

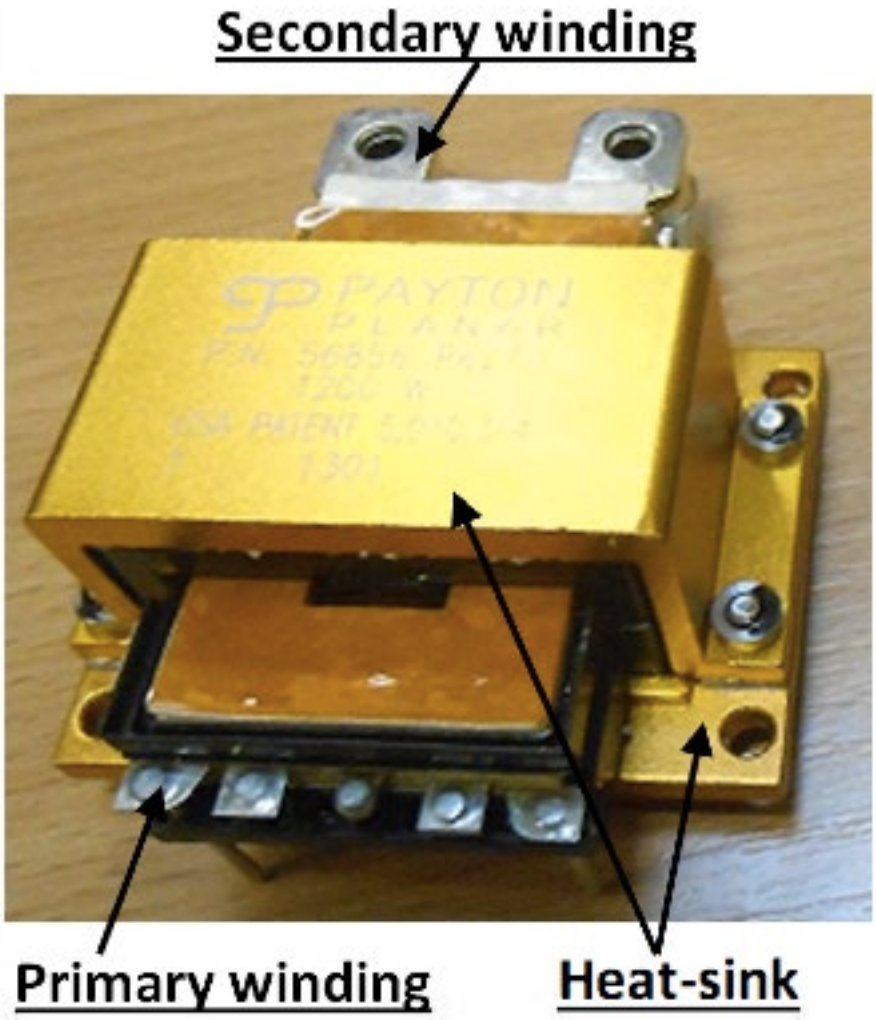

D. De, A. Castellazzi and A. Lamantia, "1.2kW dual-active bridge converter using SiC power MOSFETs and planar magnetics," *2014 International Power Electronics Conference (IPEC-Hiroshima 2014 - ECCE ASIA)*, Hiroshima, 2014, pp. 2503-2510.

Transformer with a heatsink?

Yes, this has now become a reality

Common to see LLC active bridge converters in charging applications

=> Planar Magnetics

COPYRIGHT P R WILSON 2019

High Density WBG Converter

500kHz CLLC Resonant Converter

Based around a combination of SiC and GaN devices

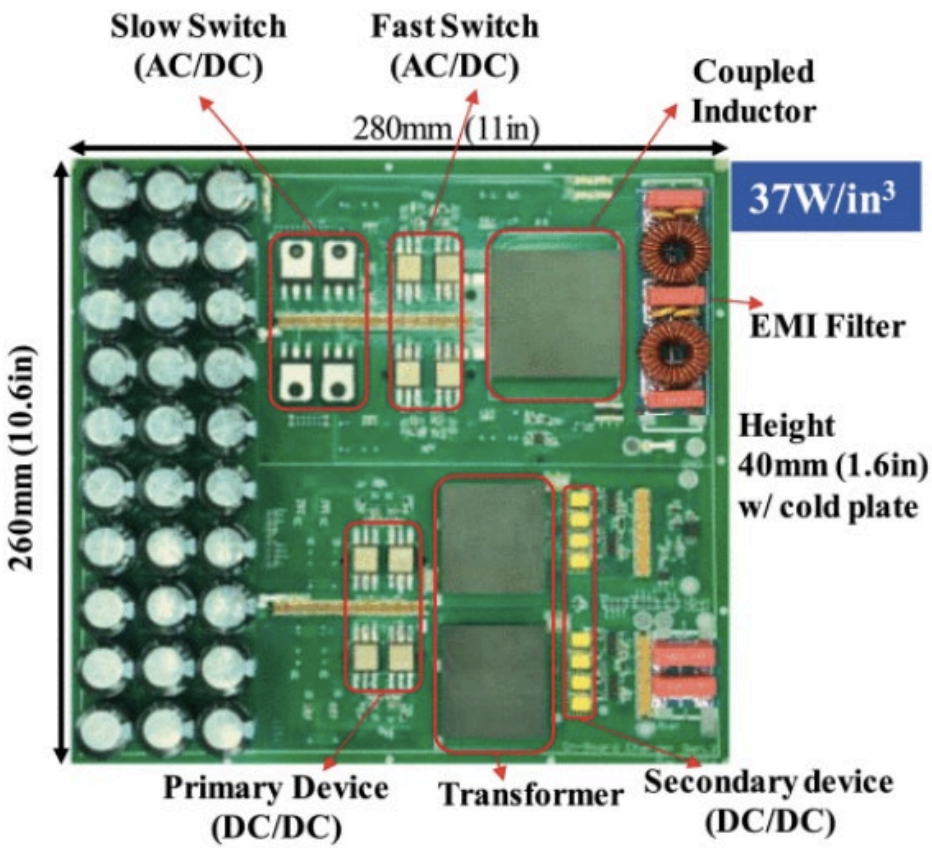

B. Li, Q. Li, F. C. Lee, Z. Liu and Y. Yang, "A High-Efficiency High-Density Wide-Bandgap Device-Based Bidirectional On-Board Charger," in *IEEE Journal of Emerging and Selected Topics in Power Electronics*, vol. 6, no. 3, pp. 1627-1636, Sept. 2018

COPYRIGHT P R WILSON 2019

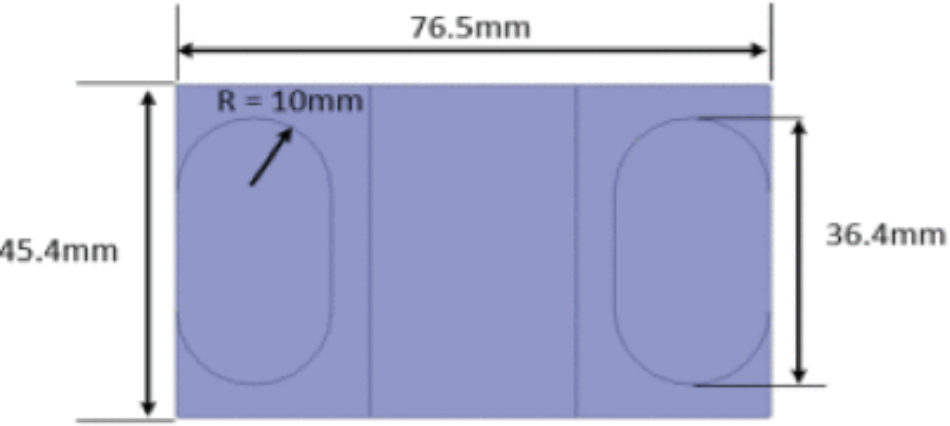

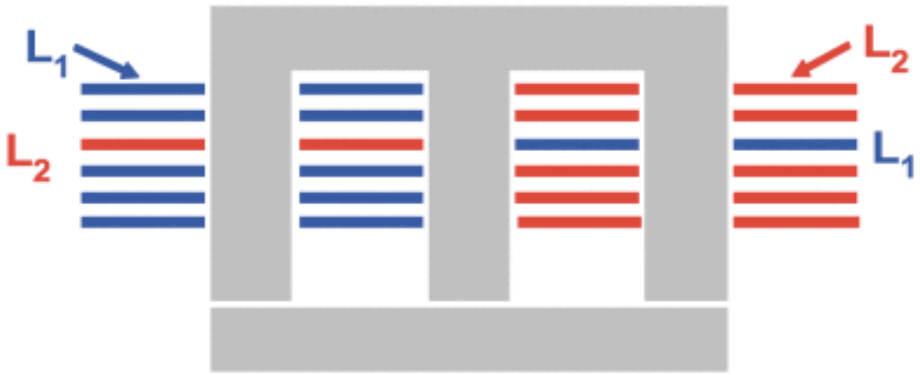

Planar Magnetics or Litz Wire?

Trade -Off:

+ Repeatable and integral to PCB design

+ Predictable Leakage Inductance

- Higher Power Losses than Litz wire solution (32W compared to 25W)

- Larger Volume (about 30% more)

COPYRIGHT P R WILSON 2019

Using Thermal Epoxy to Pot Magnetic Components

Recent studies have shown that using thermal epoxy to accurately position heat pipes and ensure that thermal design of magnetics with respect to a cold plate can provide excellent thermal performance.

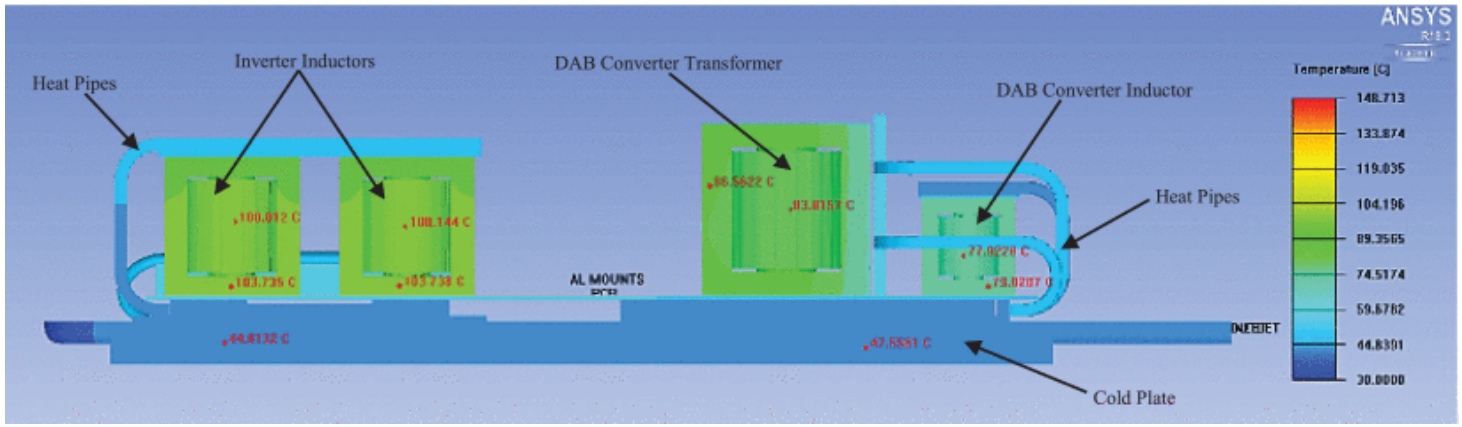

K. Gupta *et al*., "Thermal Management Strategies for a High-Frequency, Bi-Directional, On-Board Electric Vehicle Charger," *2018 17th IEEE Intersociety Conference on Thermal and Thermomechanical Phenomena in Electronic Systems (ITherm)*, San Diego, CA, 2018, pp. 935-943.

COPYRIGHT P R WILSON 2019

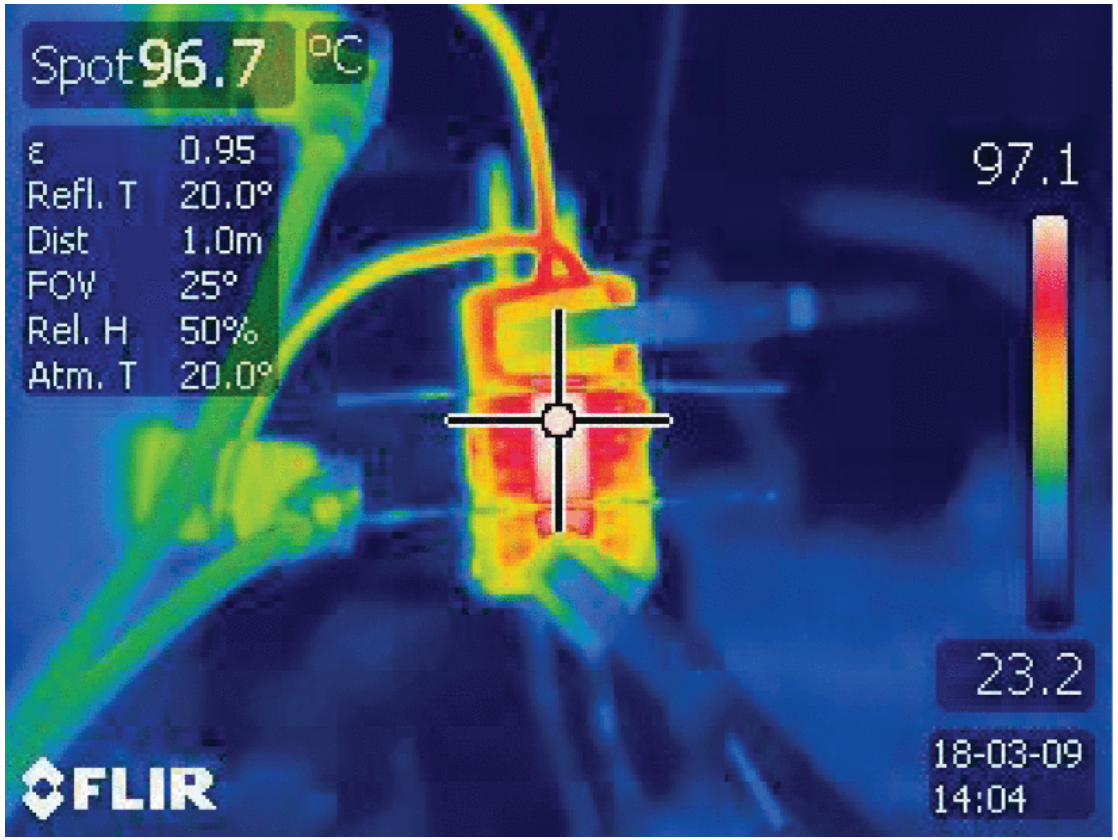

Potted Inductors in thermal expoxy

The IR camera images show the temperature rise is within the constraints of the system of 120 °C (97.1)

The epoxy potting compound is t-Global TGLHFBPE-80

The system uses a mixture of air and water cooled systems

K. Gupta *et al*., "Thermal Management Strategies for a High-Frequency, Bi-Directional, On-Board Electric Vehicle Charger," *2018 17th IEEE Intersociety Conference on Thermal and Thermomechanical Phenomena in Electronic Systems (ITherm)*, San Diego, CA, 2018, pp. 935-943.

COPYRIGHT P R WILSON 2019

New Materials are emerging

Materials that are being custom designed to provide the thermal and frequency range required for SiC and GaN devices

Particle Sizes reducing to ~2.5 um

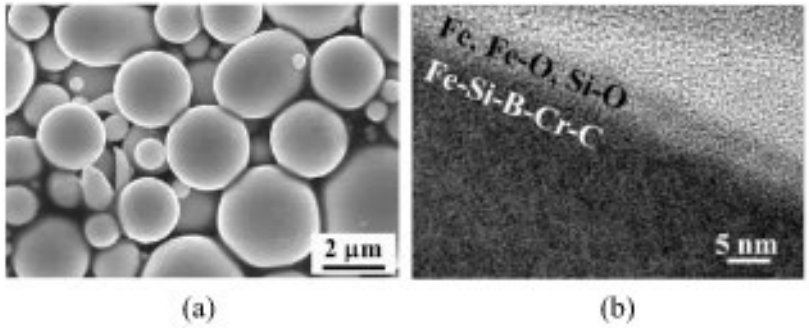

(a) SEM and (b) TEM images of as-atomized Fe-AMO powder.

K. Sugimura, N. Yabu, M. Sonehara and T. Sato, "Novel Method for Making Surface Insulation Layer on Fe-Based Amorphous Alloy Powder by Surface-Modification Using Two-Step Acid Solution Processing," in *IEEE Transactions on Magnetics*, vol. 54, no. 11, pp. 1-5, Nov. 2018, Art no. 2801805.

COPYRIGHT P R WILSON 2019

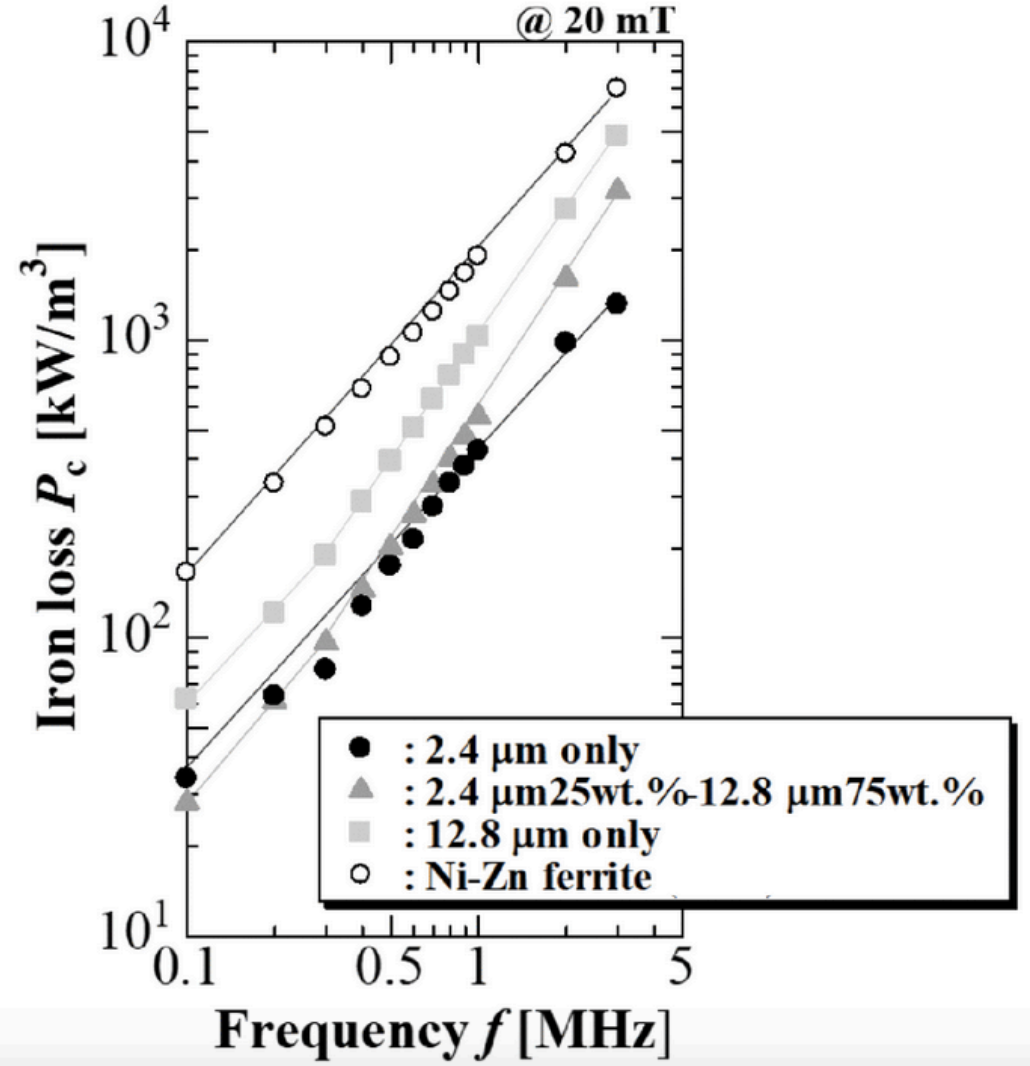

New materials show promise to provide much lower losses at a broad range of frequencies

N. Yabu, K. Sugimura, M. Sonehara and T. Sato, "Fabrication and Evaluation of Composite Magnetic Core Using Iron-Based Amorphous Alloy Powder With Different Particle Size Distributions," in *IEEE Transactions on Magnetics*, vol. 54, no. 11, pp. 1-5, Nov. 2018

COPYRIGHT P R WILSON 2019

Other new materials are being developed for High Frequency WBG power electronics

- Much of the work is concentrated on Fe-Co and Co-based nanocomposites
- High Voltage, High Frequency and High Saturation

P. Ohodnicki, A. Leary, M. E. McHenry, F. Filho, G. Nojima and A. Hefner, "State-of-the-art of HF Soft Magnetics and HV/UHV Silicon Carbide Semiconductors," *PCIM Europe 2016; International Exhibition and Conference for Power Electronics, Intelligent Motion, Renewable Energy and Energy Management*, Nuremberg, Germany, 2016, pp. 1-10

COPYRIGHT P R WILSON 2019

Conclusions

New Topologies and Techniques are emerging to take advantage of the raw speed and overall performance benefits of WBG (SiC and GaN) power semiconductors

Greater efficiencies mean that the focus is back onto the passives (Magnetic components especially) to ensure that they are more efficient

New materials to not only be more efficient, operate at higher frequencies but also be thermally tolerant

We are having to rewrite many of the rules of power electronics design, however we have many of the fundamentals defined already for magnetics components

COPYRIGHT P R WILSON 2019

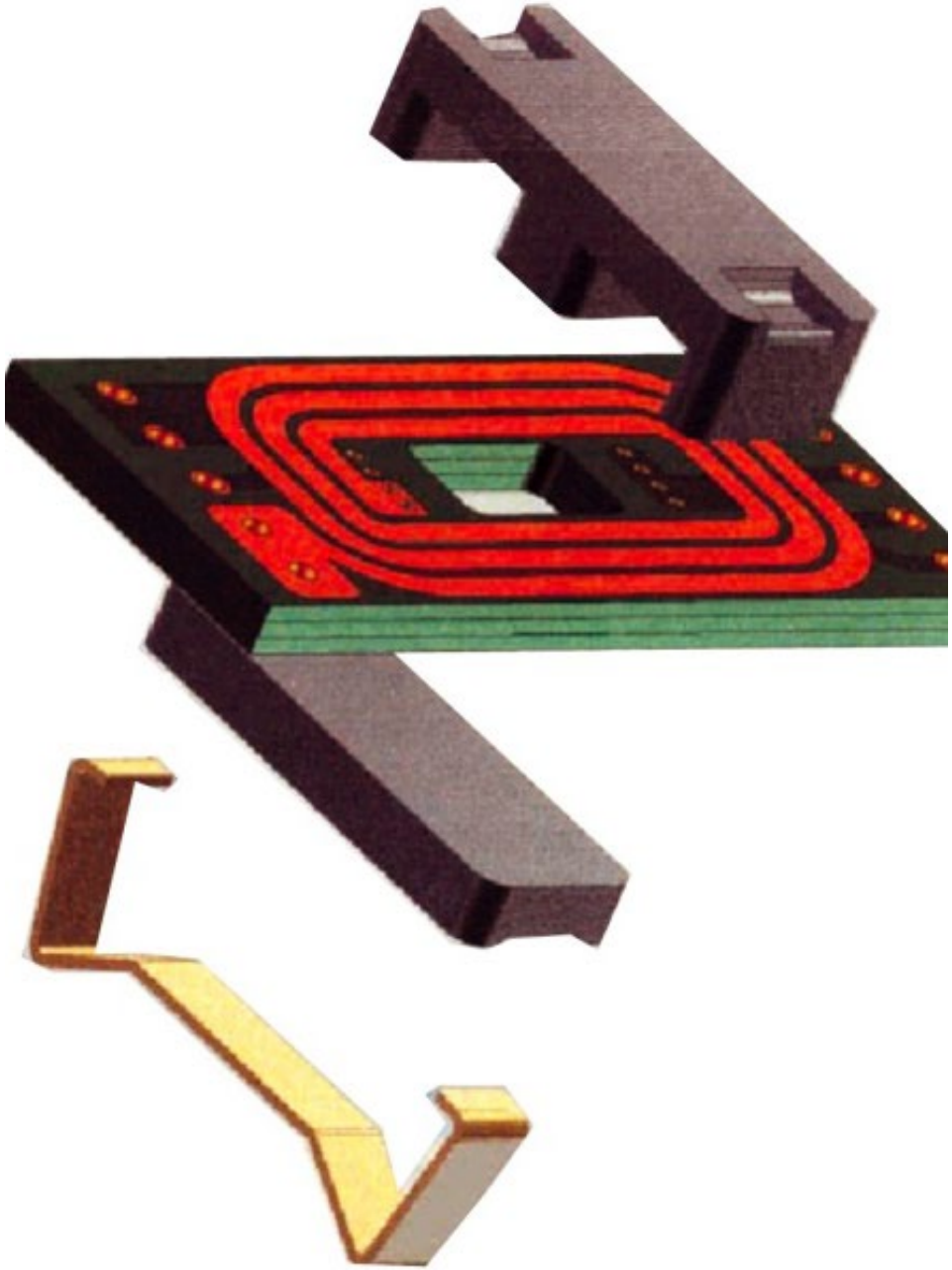

Questions?

COPYRIGHT P R WILSON 2019

Additional Slides

Further Details to supplement the presented slides

Fundamentals

Magnetic modeling uses a similar basic approach to electrical models:

- Through variable is defined as Flux (Wb)
- Across variable is MMF (Magneto Motive Force) (A).

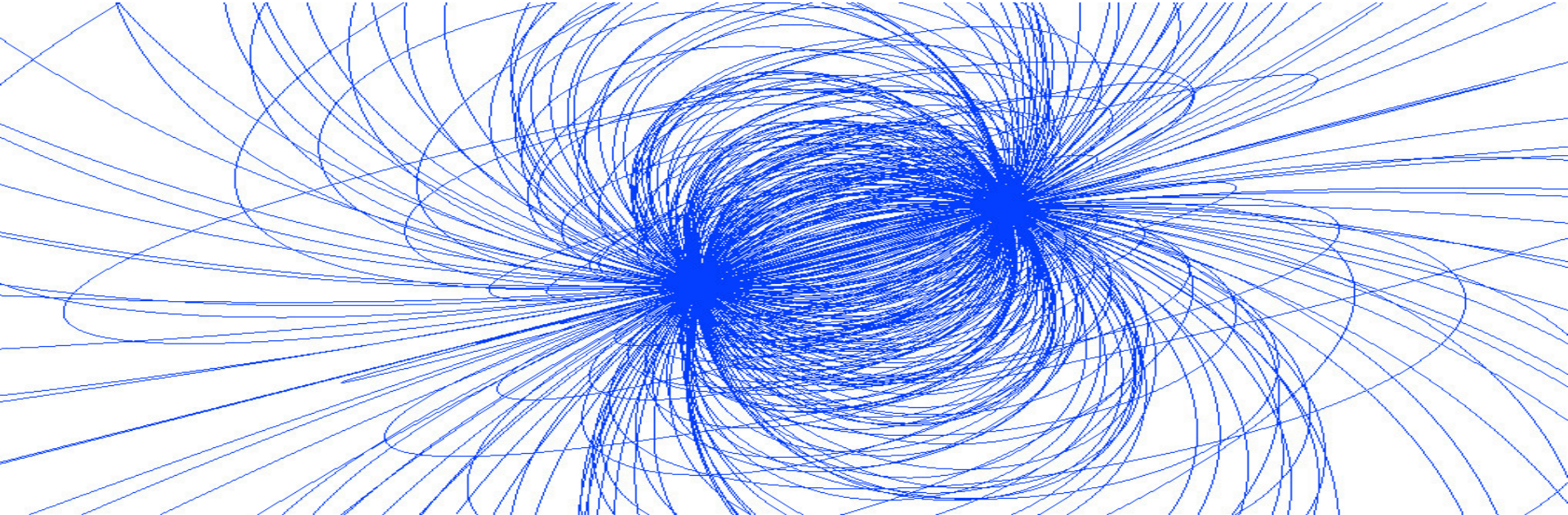

Magnetic Networks

Note, in the magnetic domain:

the power is the product of the *derivative* of the flux (Φ) and the *mmf*.

This is unlike other physical domains (such as electrical) where the power is the *direct* product of the through and across variables

For example $V \times I$ in the electrical domain

This gives power in Watts

Power

Calculating the energy in the system from the power is carried out in the same manner as the other domains

The energy is the integration of the power

In the magnetic domain, this is the integration of the mmf and the derivative of the flux:

$$Energy = \int mmf \times \frac{d\Phi}{dt} dt$$

Creating a simple core model

The relationship between the flux and the mmf in a linear core model is defined as follows:

$$mmf = flux \times \Re$$

Where the reluctance ($\Re$) is related to the size of the core and the permeability.

Reluctance Model

- In most practical systems, the designer is concerned with the relationship between the flux density (*B*) and the field strength (*H*)
- These are related to the flux and mmf, respectively, with the area (*A*) and length (*L*) of the core material:

$$B = \Phi / A$$

$$H = mmf / L$$

Reluctance Model

In fact, the core model is often expressed in terms of *B* and *H*

The reluctance is then calculated from the permeability, Cross Sectional Area and Effective Core Length

where μ_r is the relative permeability of the core material.

$$B = \frac{\mu_0 \mu_r L}{A} \times H$$

The Jiles Atherton Model

a bit more detail on the JA model

28/03/2019

COPYRIGHT P R WILSON 2019

Jiles-Atherton Model

The total lumped magnetization as derived by Jiles and Atherton is given by:

$$M_{TOTAL} = M_{IRREVERSIBLE} + M_{REVERSIBLE}$$

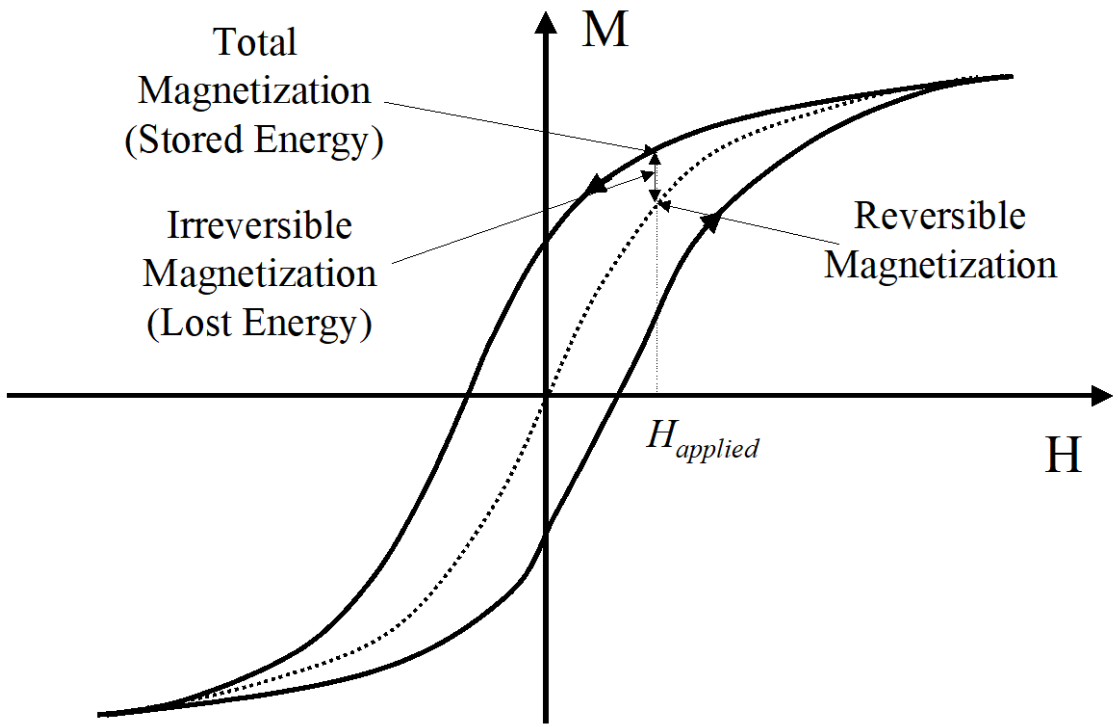

Langevin Function

The normalized anhysteretic function, M_{an}, is approximated by the Langevin function

$$Man = \frac{1}{\tanh(He/A)} - \frac{A}{He}$$

The rate of change of the irreversible magnetization, M_{irr}, is obtained using

$$\frac{M_{irr}}{dH} = \frac{(M_{an} - M)}{\frac{\delta k}{\mu} - \alpha(M_{an} - M)}$$

Bringing it together

The total magnetization rate of change is calculated using

$$\frac{dM}{dH} = \frac{1}{1+c}\frac{Man - M}{\frac{\delta k}{\mu} - (Man - M)} + \frac{c}{1+c}\frac{dMan}{dH}$$

A problem is that most time domain circuit simulators do not implement partial derivatives

Therefore need to implement Runga-Kutta or “spoof” using time derivatives and separate variables

Avoiding problems

Implementing the nonlinear equations for the Jiles-Atherton model highlight a number of issues

Taking the Langevin equation it can be seen that for small values of magnetic field strength

- there will be an issue when H approaches zero
- leading to an infinite value of magnetization

Most implementations use a small linear region close to the origin, such that the potential divide by zero error is avoided.

References

[JA1] DC JILES & DL ATHERTON, “Theory of Ferromagnetic Hysteresis (invited)”, Journal of Applied Physics, Vol. 55 , No 6, Mar 1984, 2115-2120

[JA2] D.C.JILES & D.L.ATHERTON, “Theory of Ferromagnetic Hysteresis”, Journal of Magnetism and Magnetic Materials, 61, 1986, 48-60

[JA3] D.C. JILES & D.L. ATHERTON, "Ferromagnetic Hysteresis", IEEE Transactions on Magnetics, Vol 19, No. 5, Sep 1983, pp2183-2185

COPYRIGHT P R WILSON 2019

Genetic algorithms

Mimic nature’s best bits…

Genetic Algorithms (GA)

GAs are a type of **stochastic search**.

They can be used when gradient searches can not be applied.

They are particularly useful for **combinational problems** (trying different configurations).

Genetic Algorithms are search algorithms based on **evolution**. Darwinian survival of the fittest.

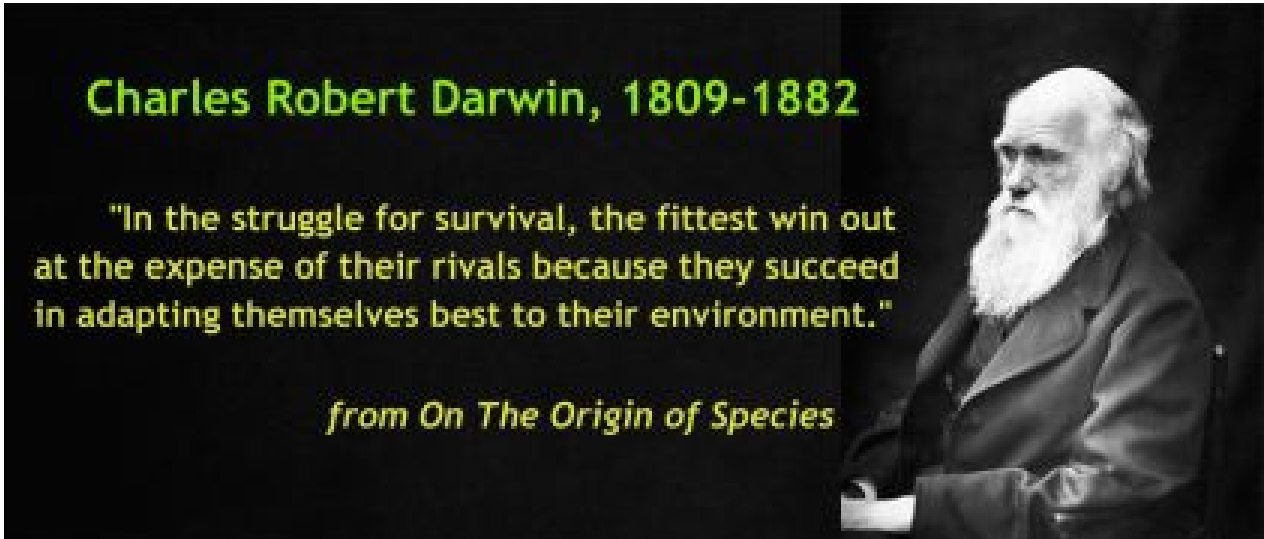

So, how do we “copy” Evolution?

1. Initialize…

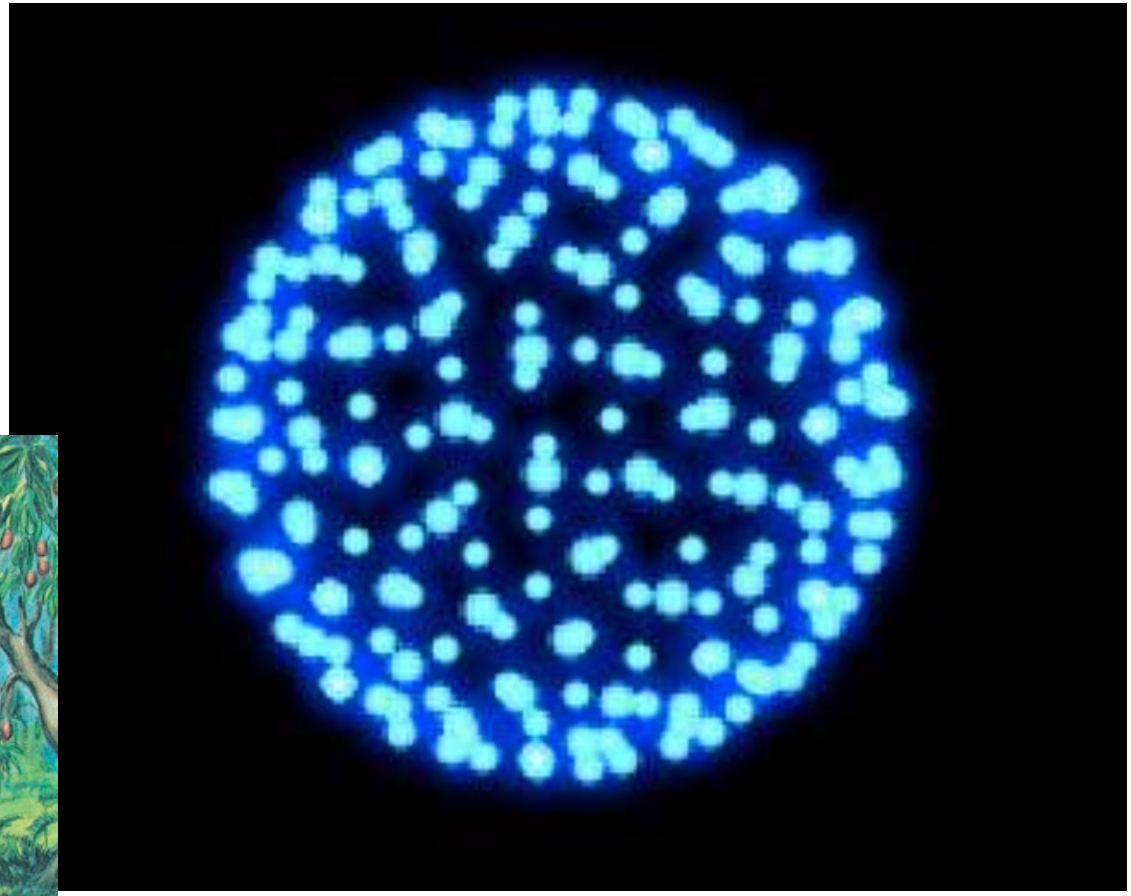

2. Then evaluate…

and 3. rank….

4. Selection…

5. Crossover & mutation

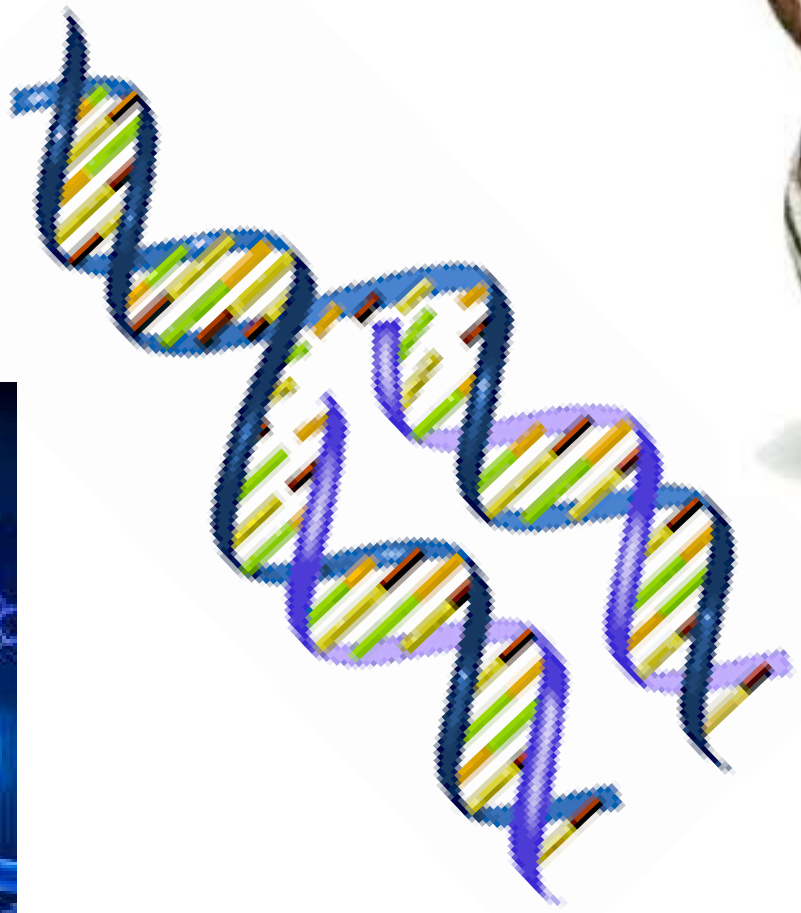

6. Survival (of the fittest?)

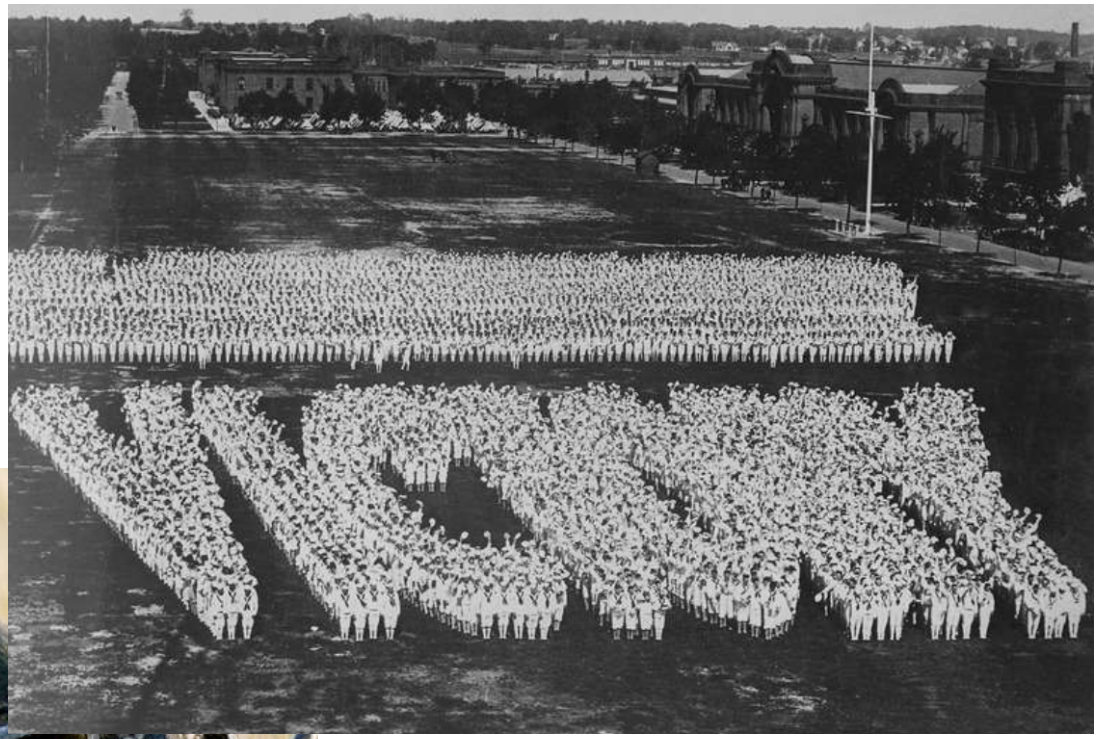

So what's the problem? It's bound to get the right answer in the end, isn't it?

Evolution always works…doesn't it?

Err….

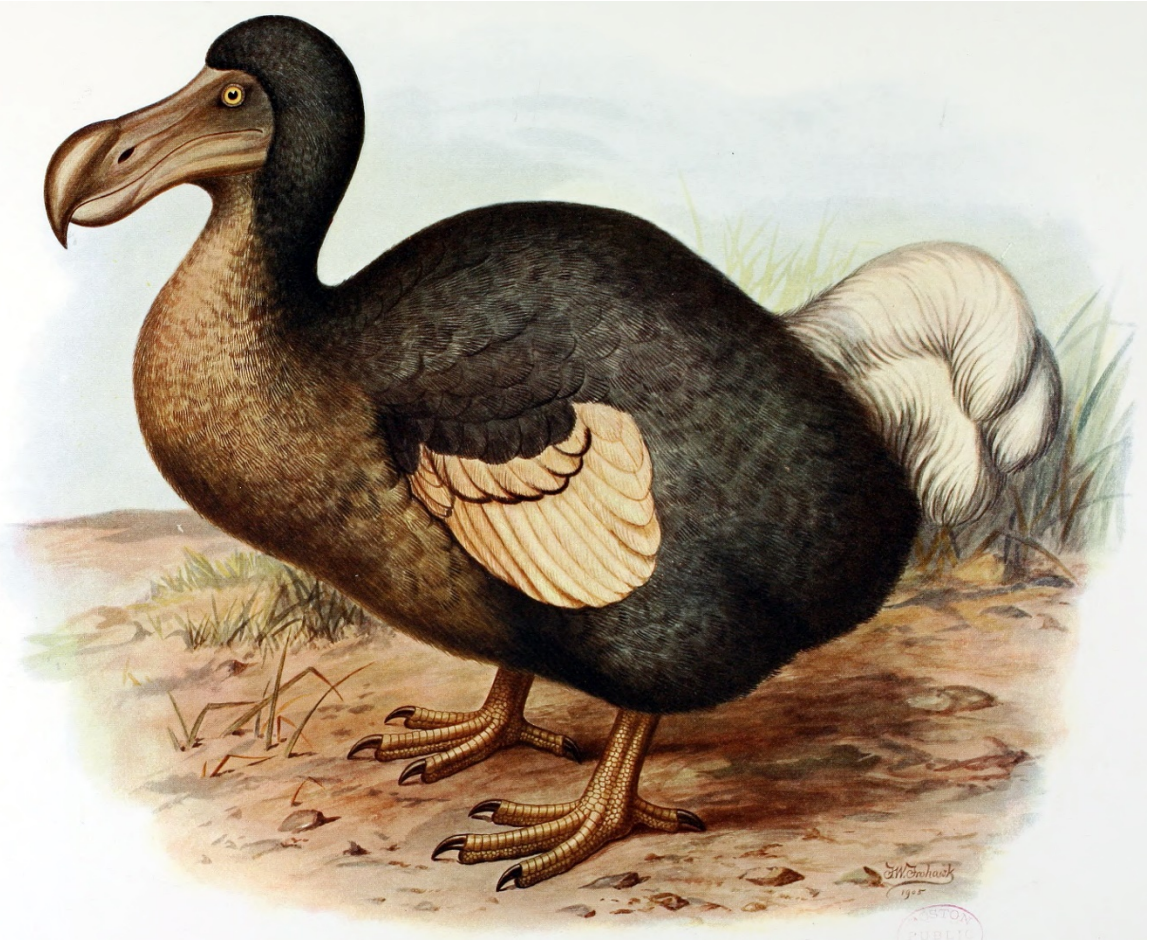

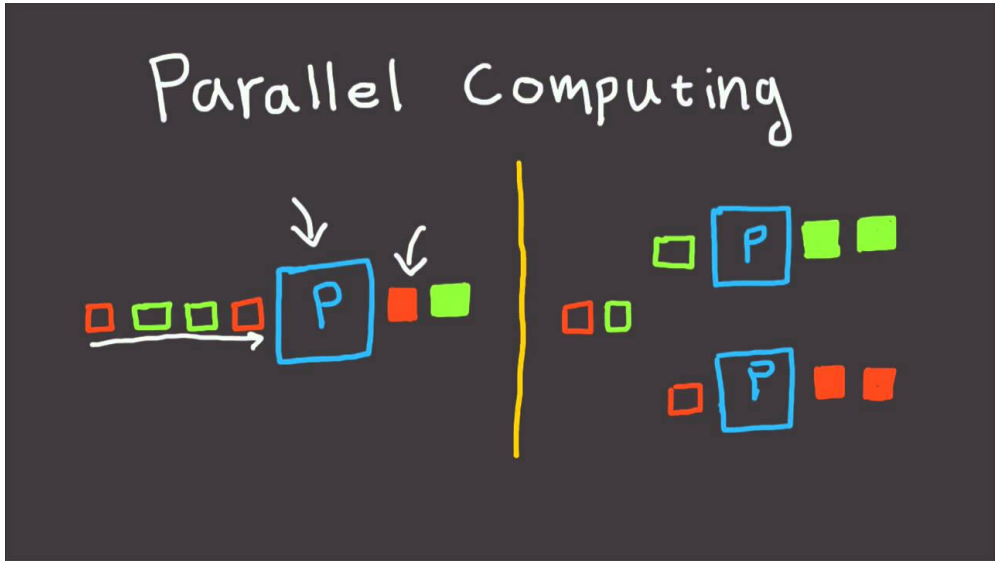

Parallelism

GA are inherently **parallel** .

All the evaluations can be done at the **same time**.

Ideal for multiprocessor or distributed machines.

Diversity and Stagnation

Diversity is when the population has a variety of genetic material. This is generally desirable for exploring different parts of the optimization landscape.

Stagnation is the opposite of diversity all the genes in the population have similar genetic information. This can sometimes happen and we can get stuck in a local maximum.

Mutation and crossover help create diversity.