Multi-parameter Magnetic Material Characterization for High Power Medium Frequency Converters

Richard Byron Beddingfield[1,2]
Dr. Subhashish Bhattacharya[1], Dr. Paul Ohodnicki[2]
[1]North Carolina State University, NSF FREEDM Systems Center
[2]National Energy Technology Labs

Motivation

- Static Core Parameters
  - Volume
  - Cross Sectional Area
  - Magnetic Length
- Well Known Variables
  - Sinusoidal Core Loss
- Less Known Variables
  - Non-Sinusoidal Core Loss, Trapezoidal
  - Thermal Rise
  - Operating Point Dependent Permeability

Application Space Examples

- AC and DC Active Filters

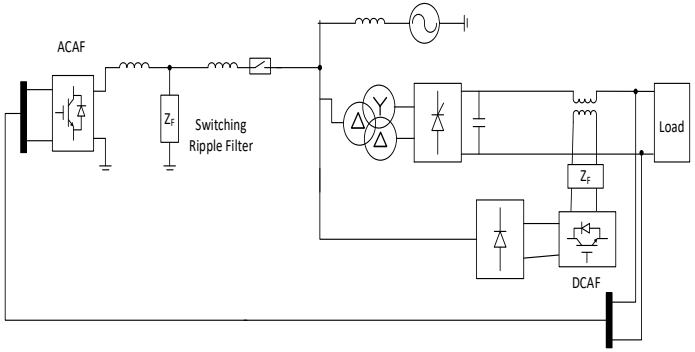

- Solid State Transformers

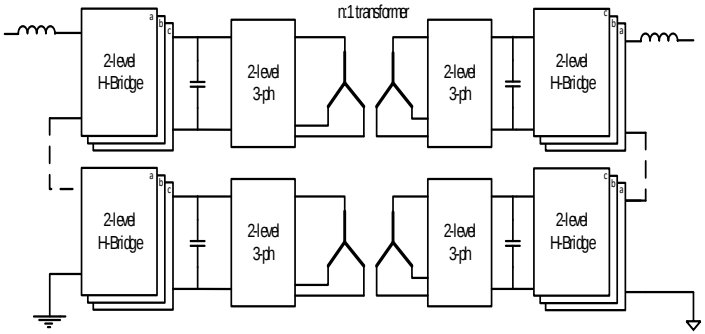

- Dual- / Tri- Active Bridge

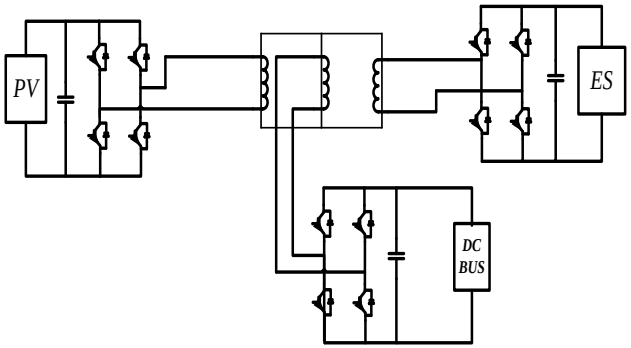

Test System Requirements

- Minimal Testing Losses / Impact
- High Power
  - Energize / Study Cores for 100kVA Systems
  - 1.2 kV, 1.7 kV as Low Voltage Rating
  - High Testing Temperatures > 100 C ~200 C
- Medium Frequency
  - 1 kHz to 500 kHz
- Application Specific Excitation
  - Trapezoidal, Triangular, Sinusoidal, Arbitrary Excitation Shape
  - Blanking Time, Deadband

Core Harness for Constant Force Study

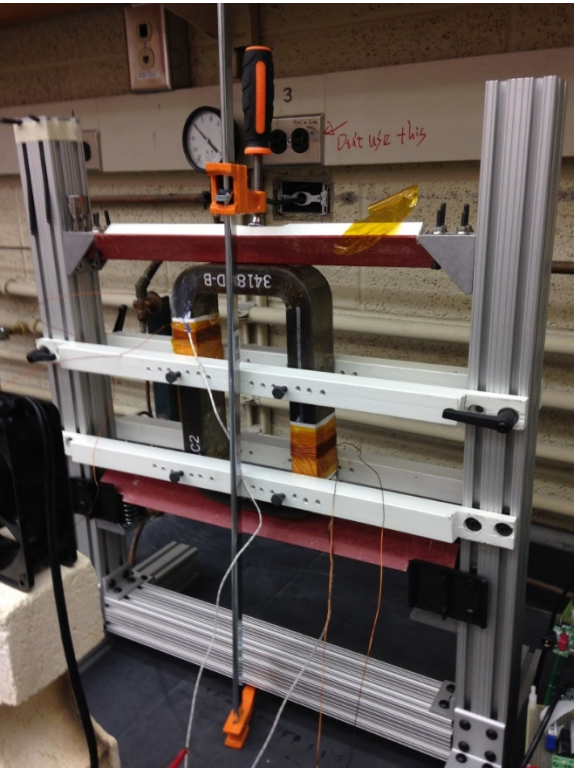

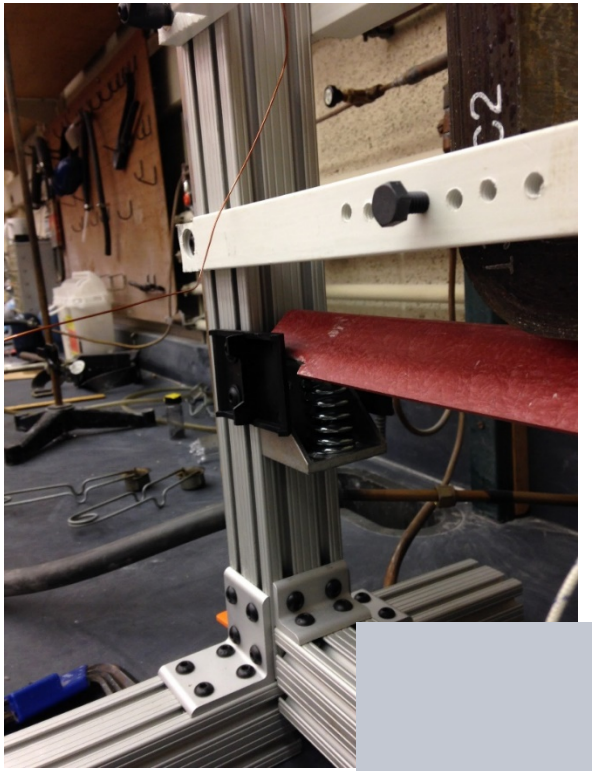

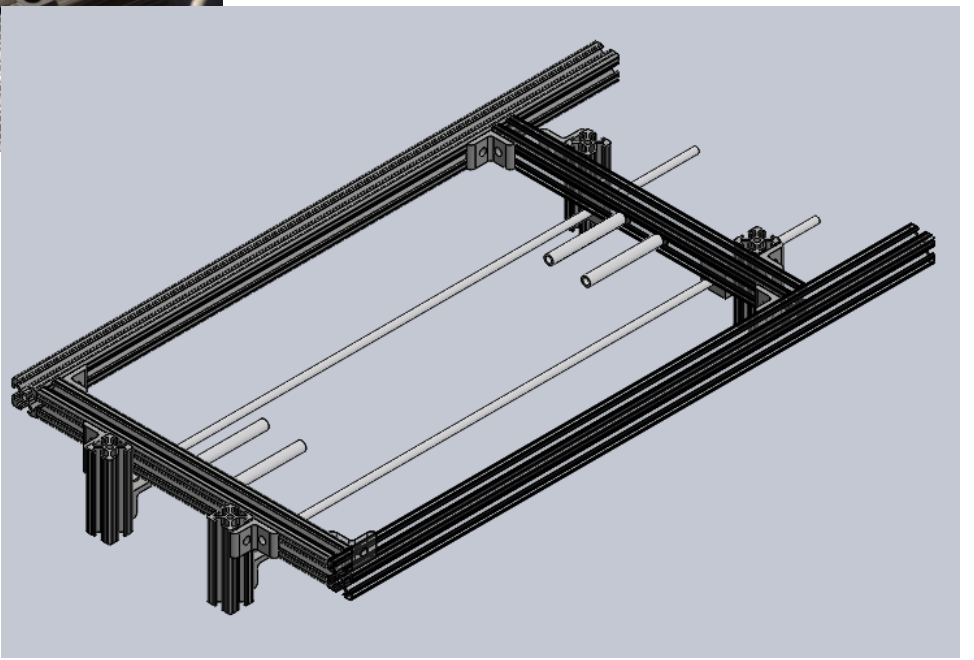

High Temperature

Historical Approach to Core Loss

Akagi

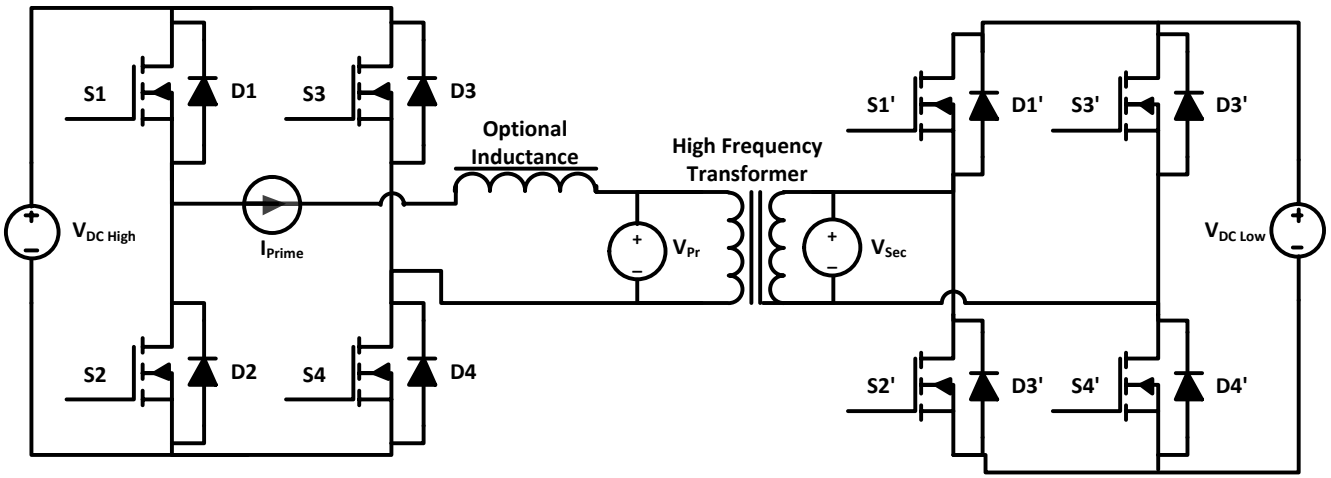

Kolar / Rik de Doncker / Sullivan et. al.

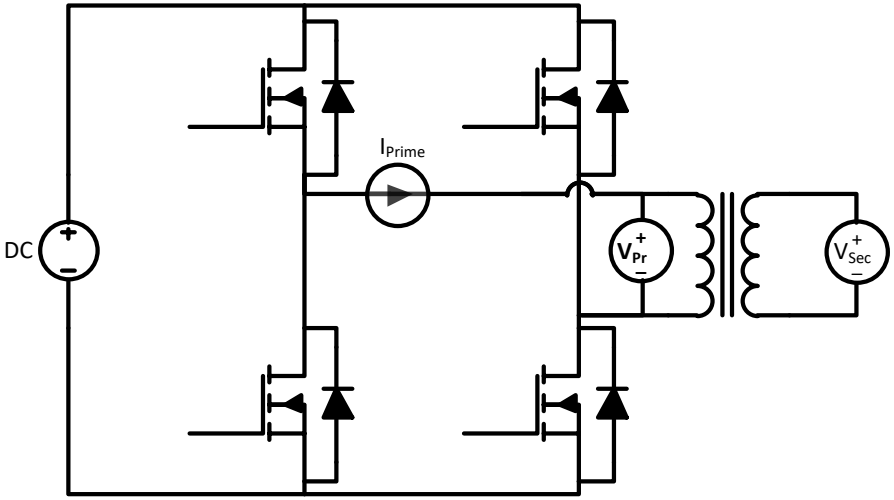

Transformer Voltages for Trapezoidal Excitation – DAB Motivation

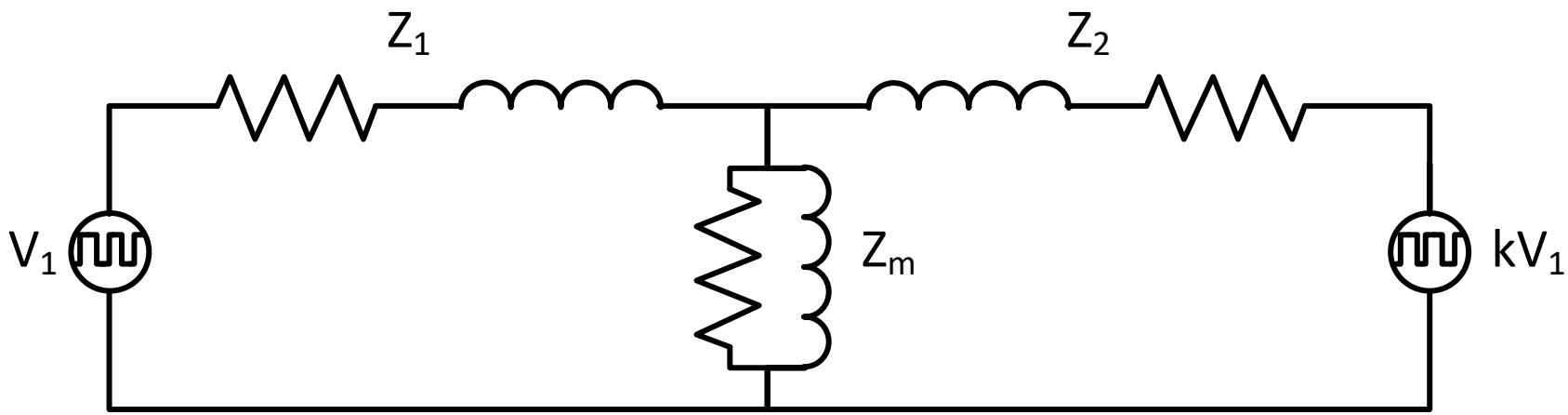

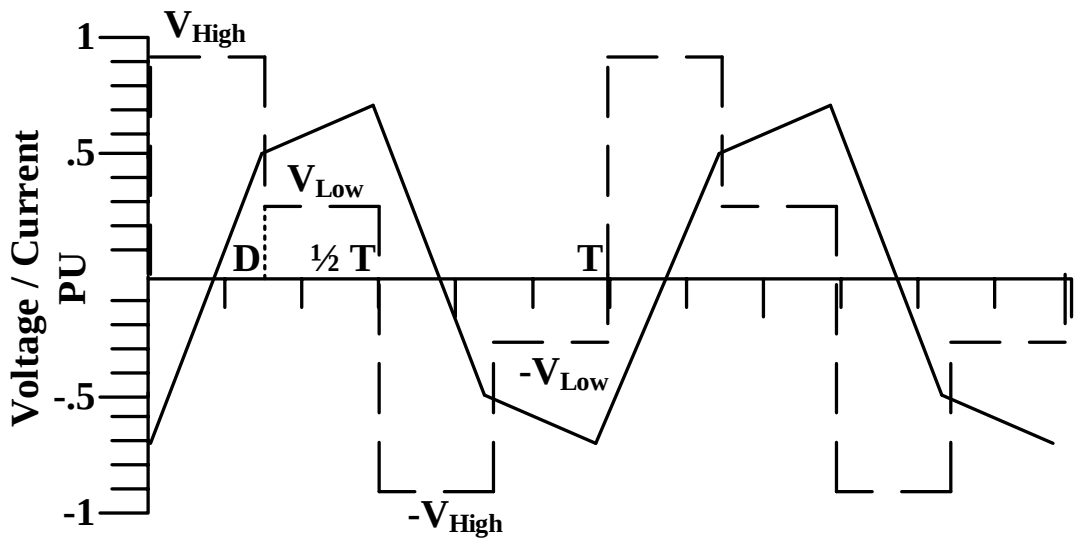

Core Test Circuit for Trapezoidal Excitation

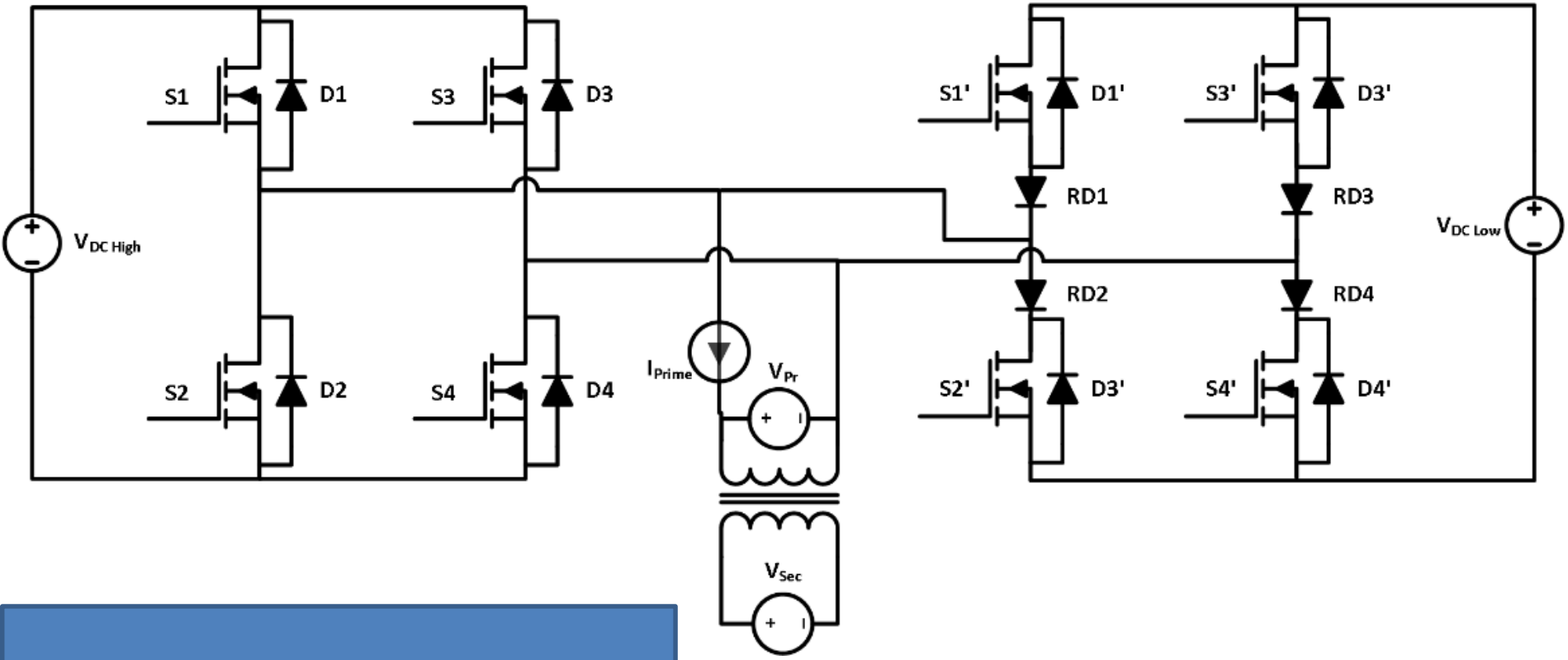

Provisional Patent: 98192/1063283, 62/583,843

Dual Voltage Source Core Tester

Flat Top Excitation

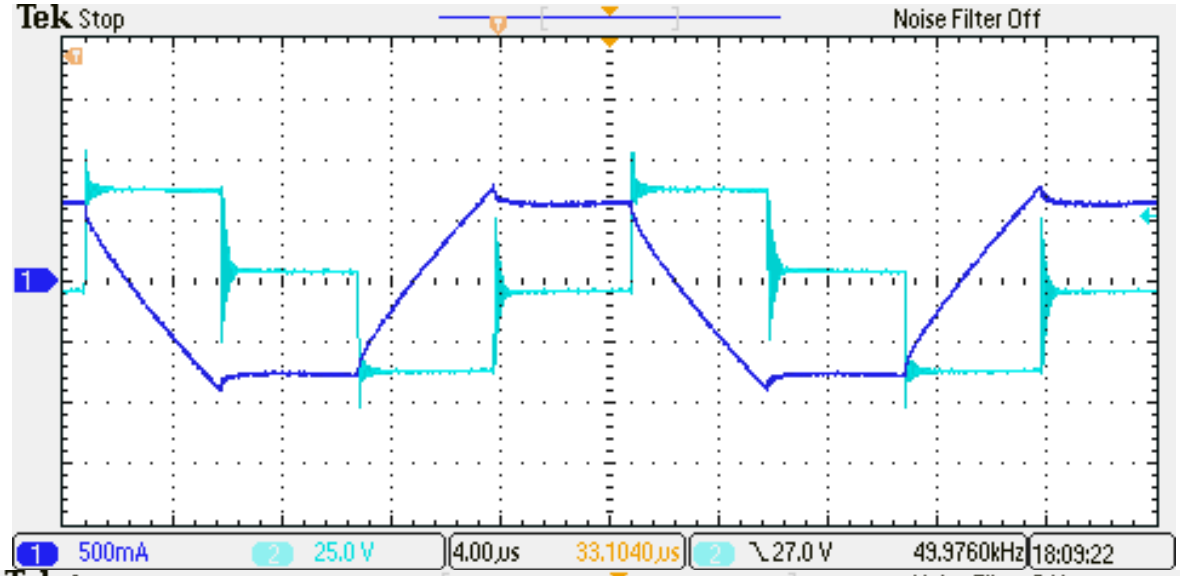

Dual Slope Excitation

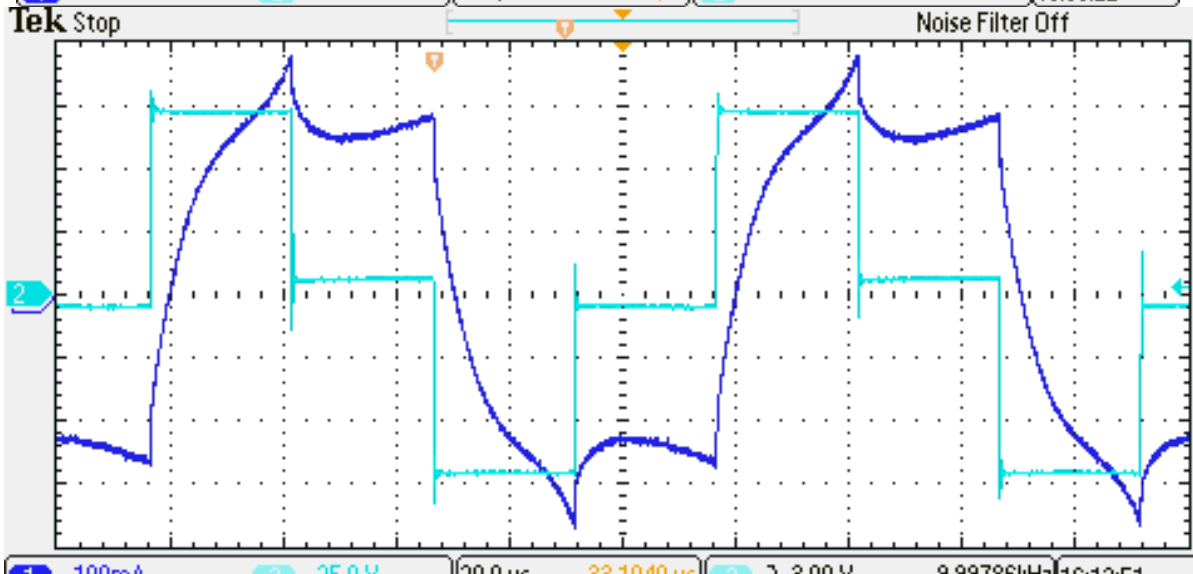

DVS Core Tester Verification: Air Core

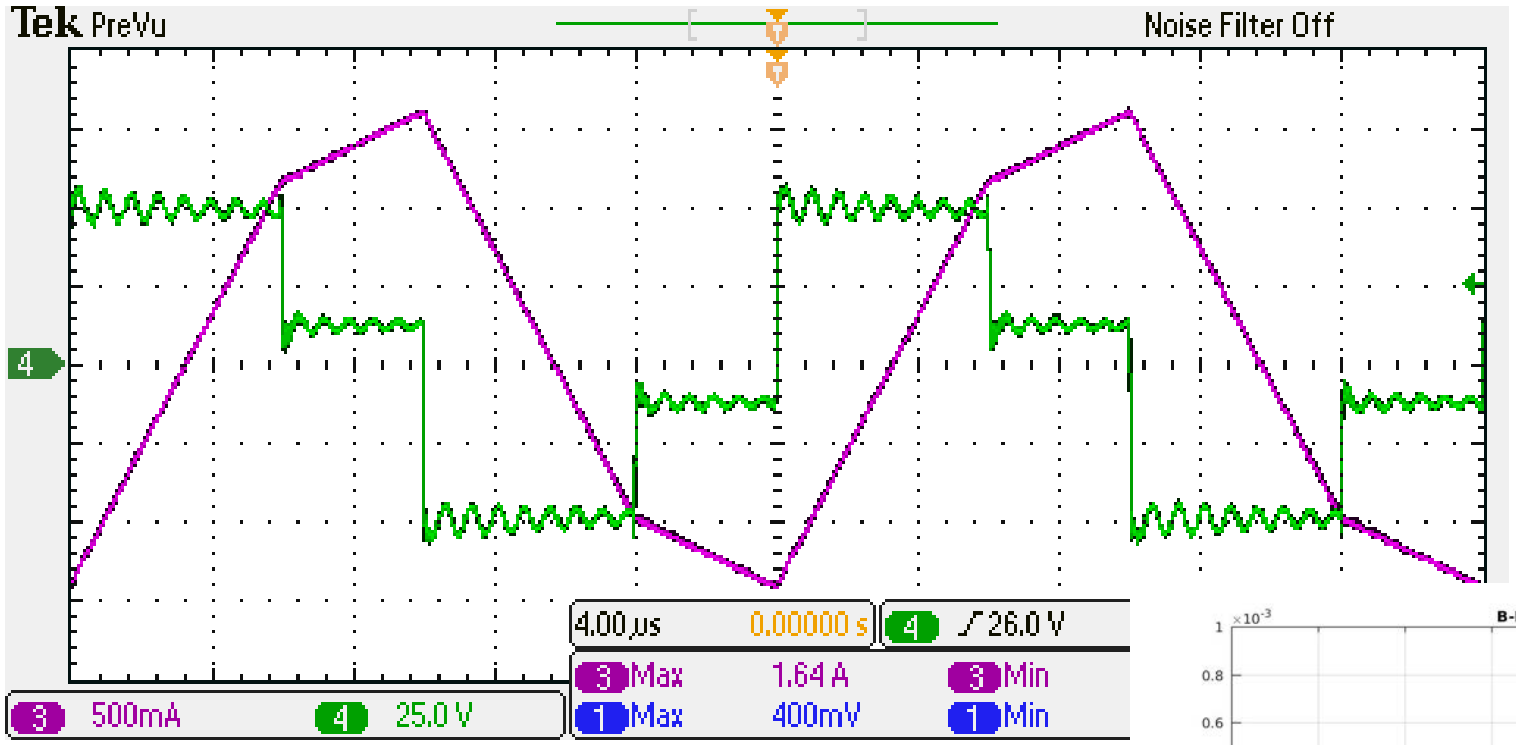

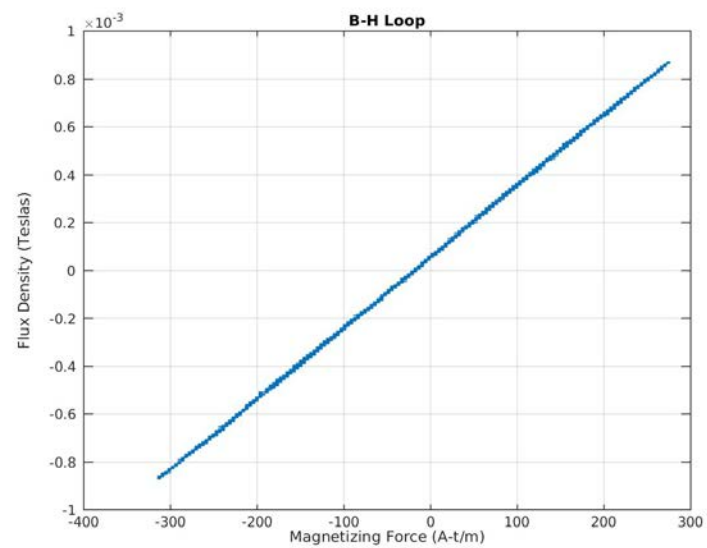

DVS Core Tester Verification: SiFe Core

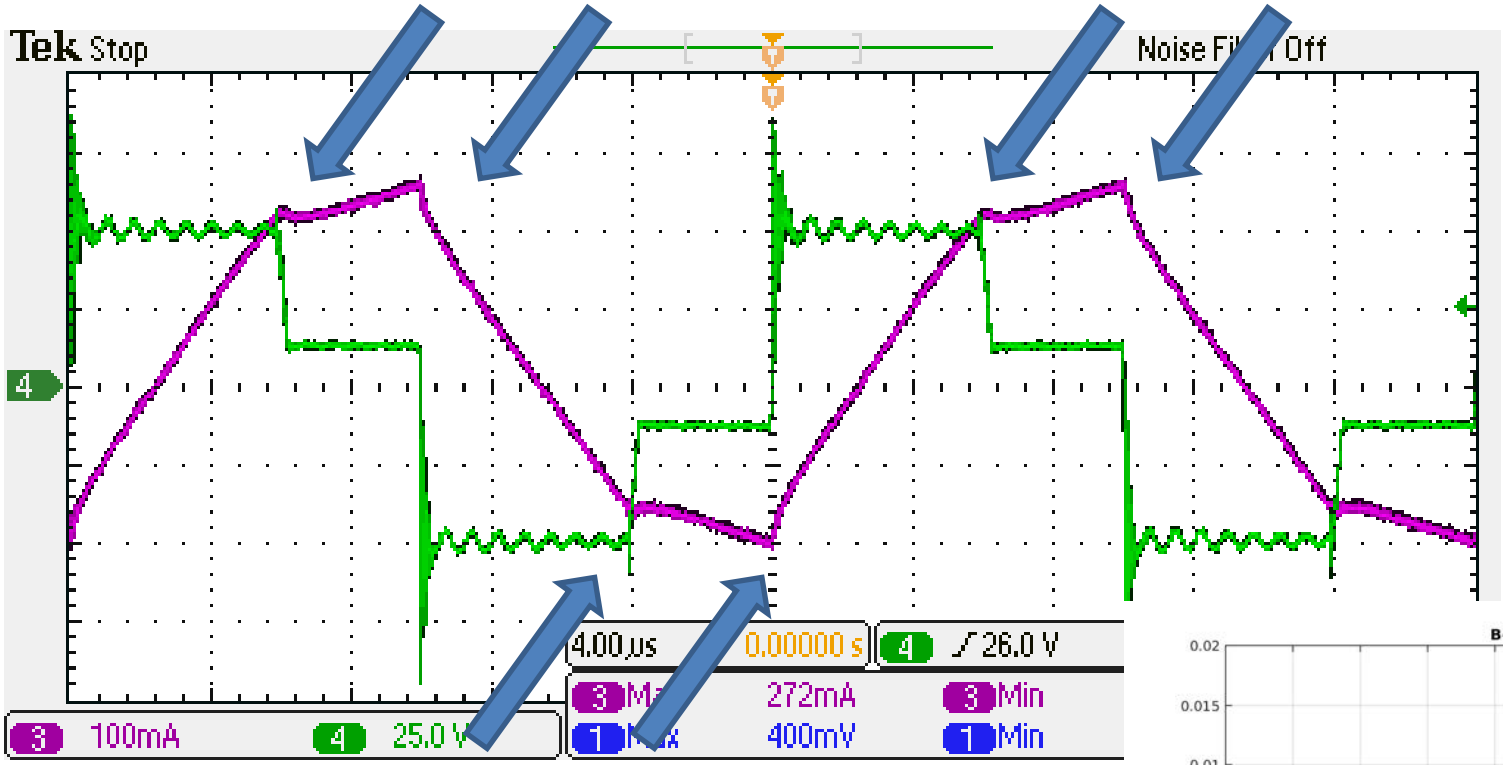

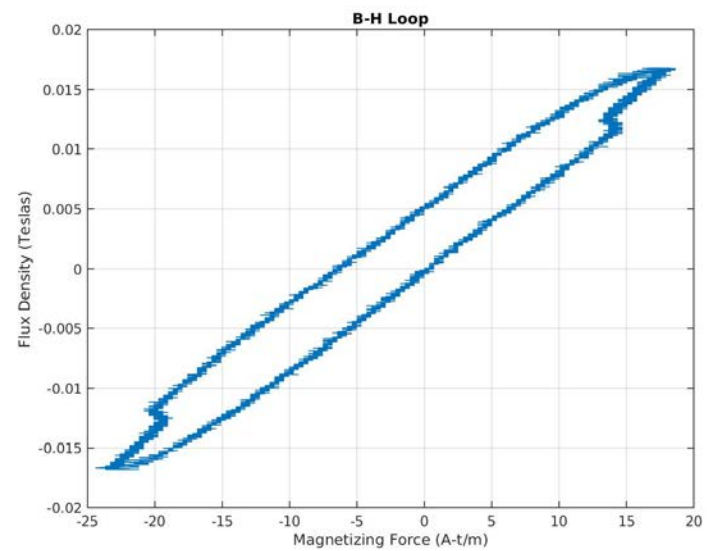

Silicon Iron Core Inserted Into Previous Inductor

DVS Core Tester Verification: Air Core[2]

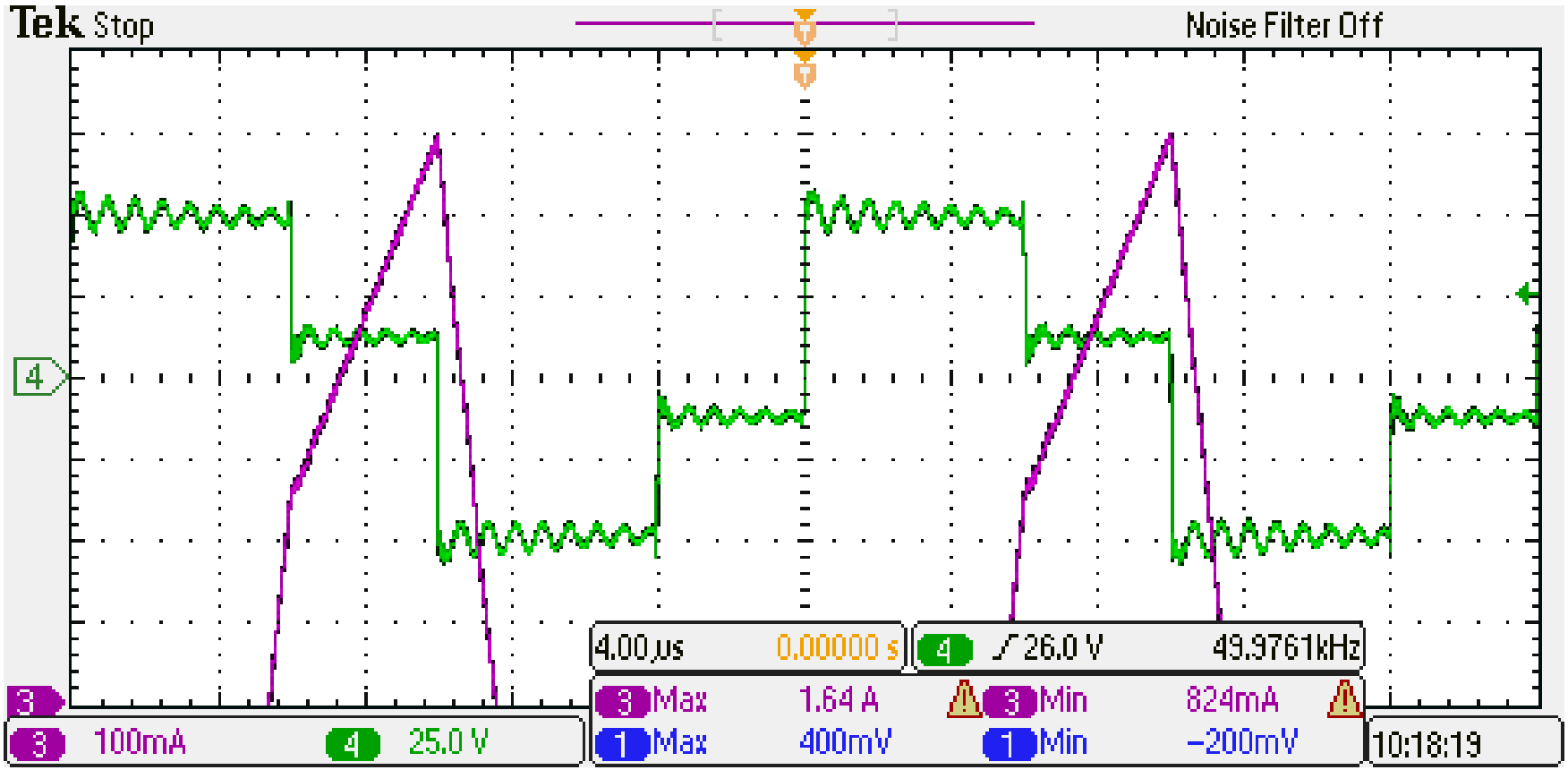

Silicon Iron Removed, Same Scaling on Scope

Core Characterization Map

Core Loss (Watts/ kg)

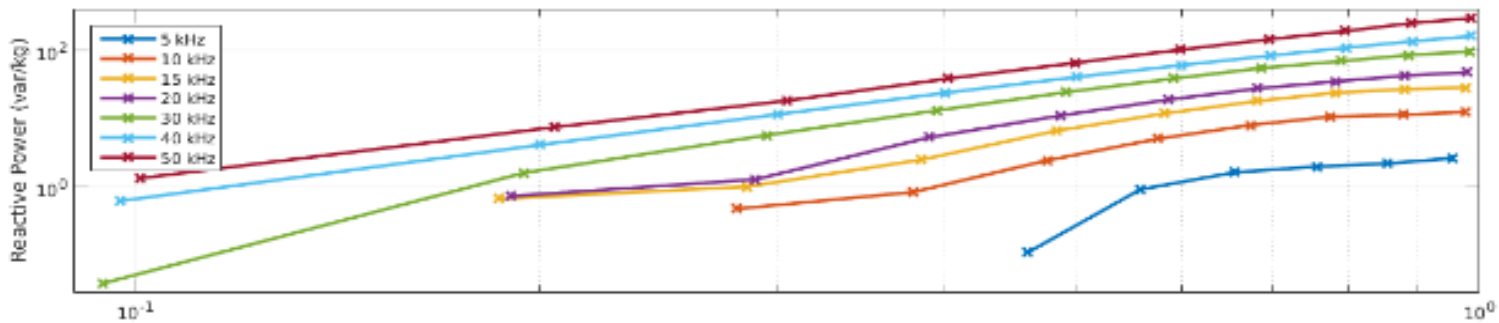

Core Excitation (Var/ kg)

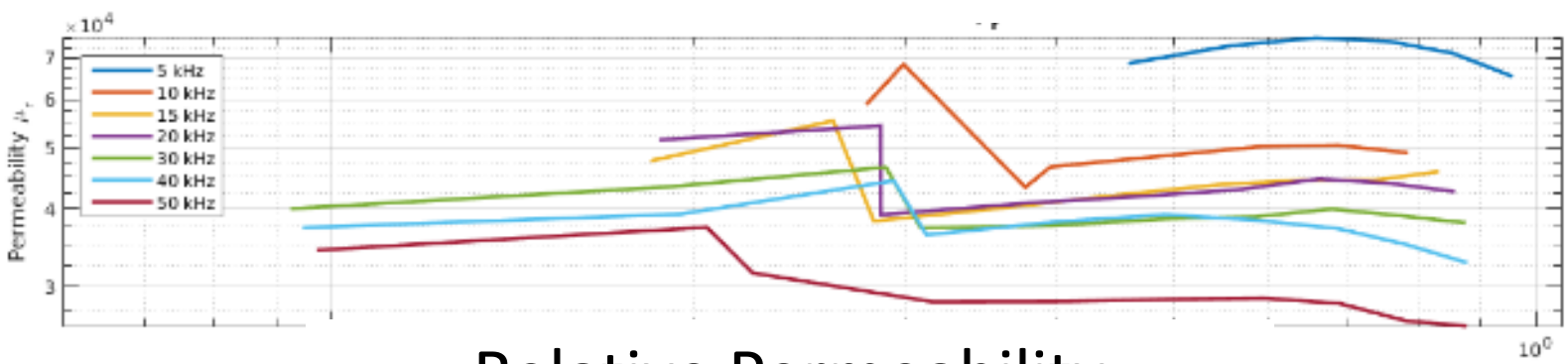

Relative Permeability

Loss Comparison: 50% vs 25% Duty

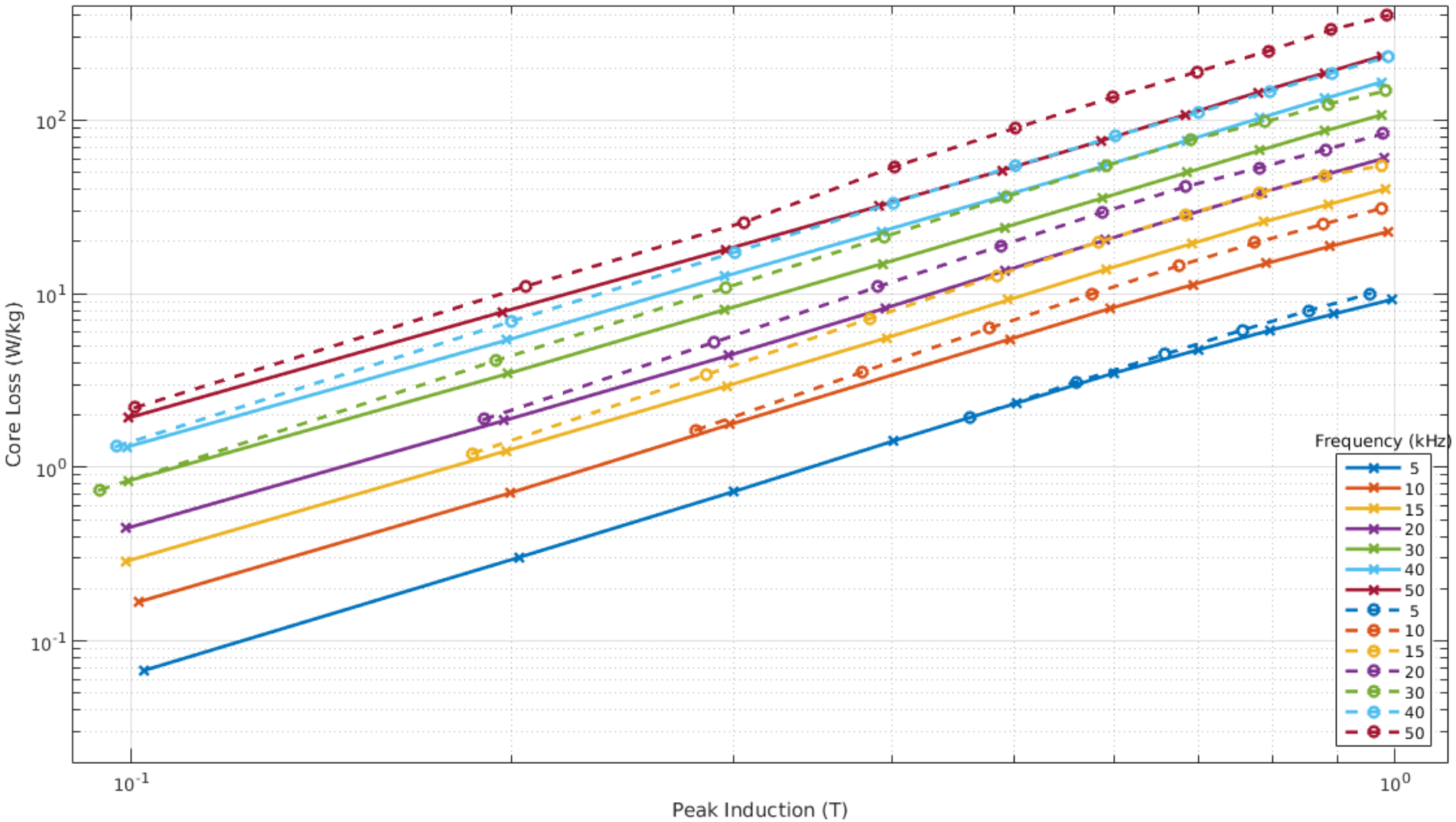

Hysteresis Comparison: 50% vs 25% vs 10% Duty Cycle (B_{pk}=.5T, 10 kHz)

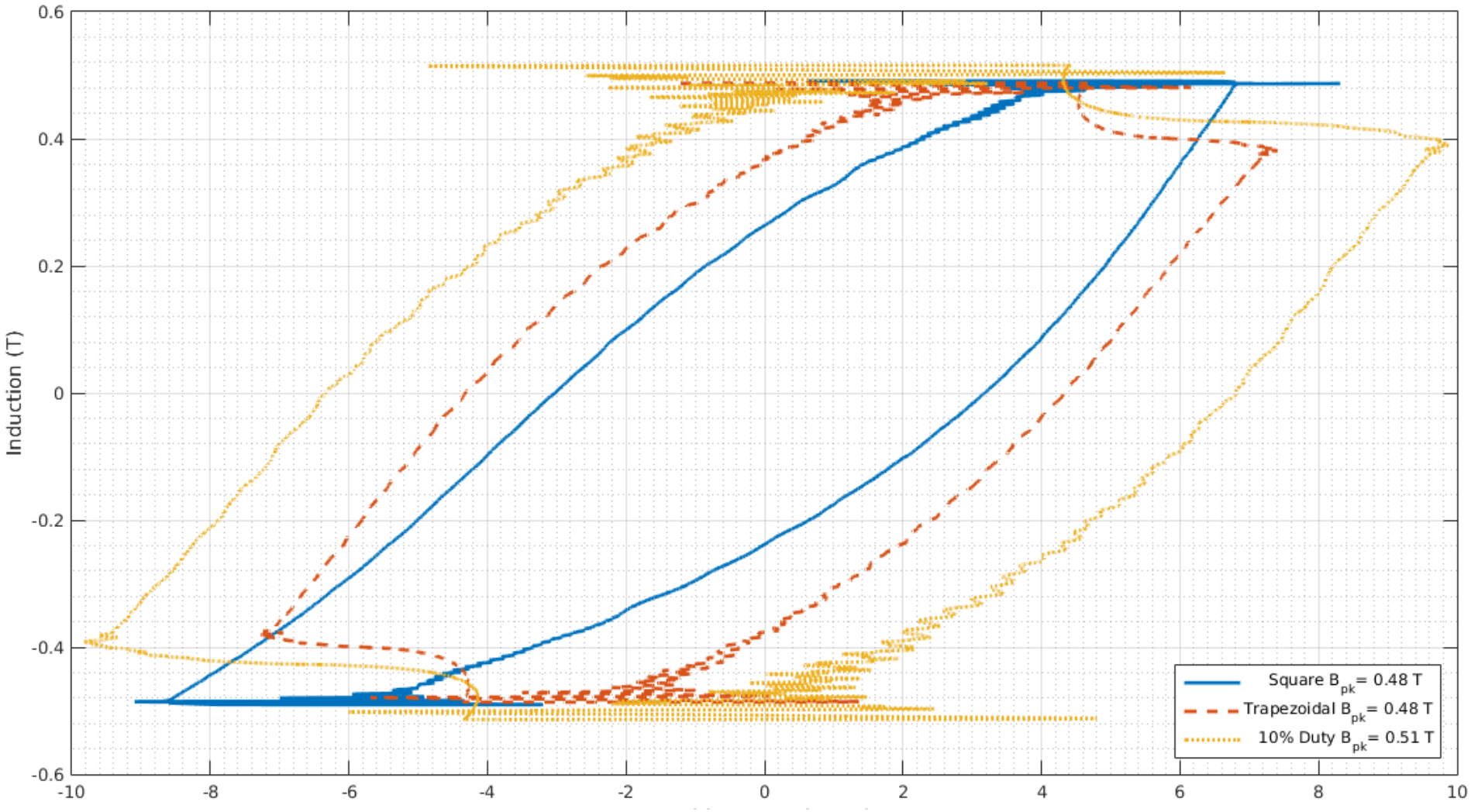

Thermal Characterization

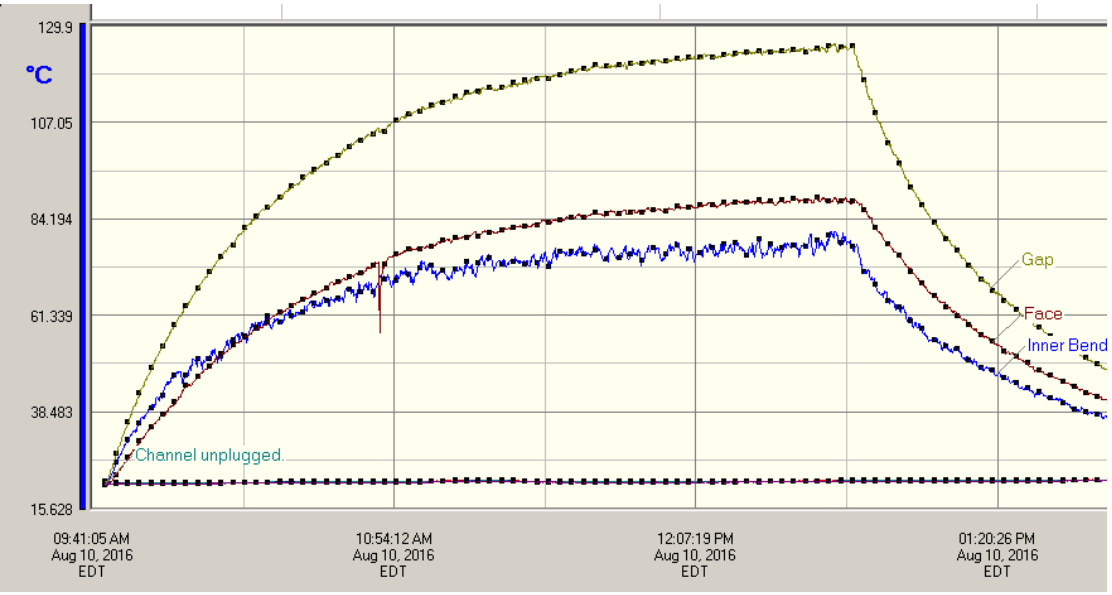

Three Hour Run

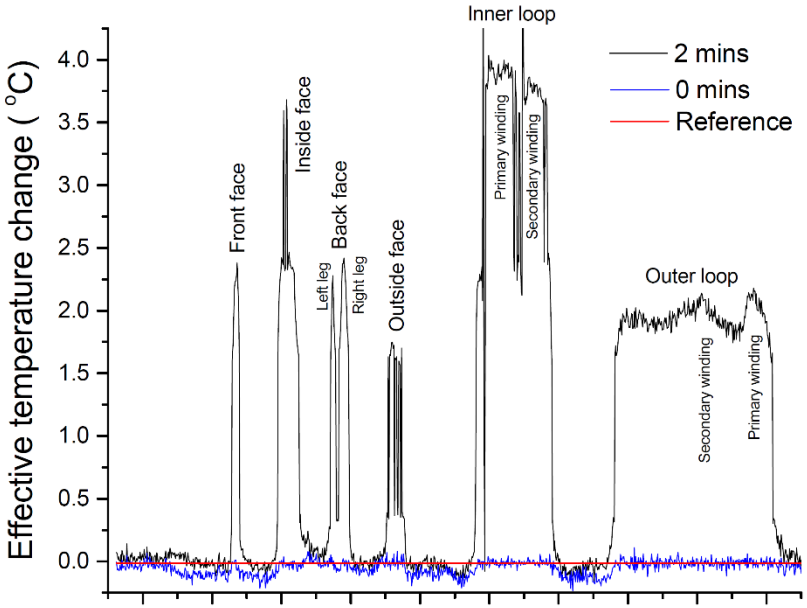

Advanced Thermals

Thermocouples

- Beveled Cut - Gold
- Inner Bend - Blue
- Center - Red

- Fiber Optic Strand
- Provides Temperature Profile

Provisional Patent: 62/606,160

Core Parameter Variation for 22 C to 80 C Core Temperature Change

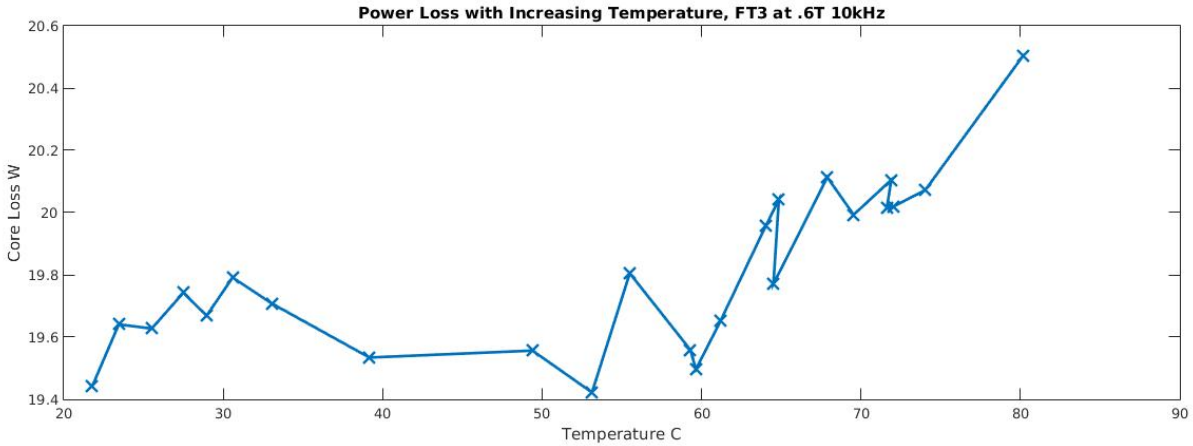

Constant 0.6 T Induction
Constant 10 kHz Frequency
6% Core Loss Variation
300% Magnetizing Power Variation
300% Relative Permeability Decrease

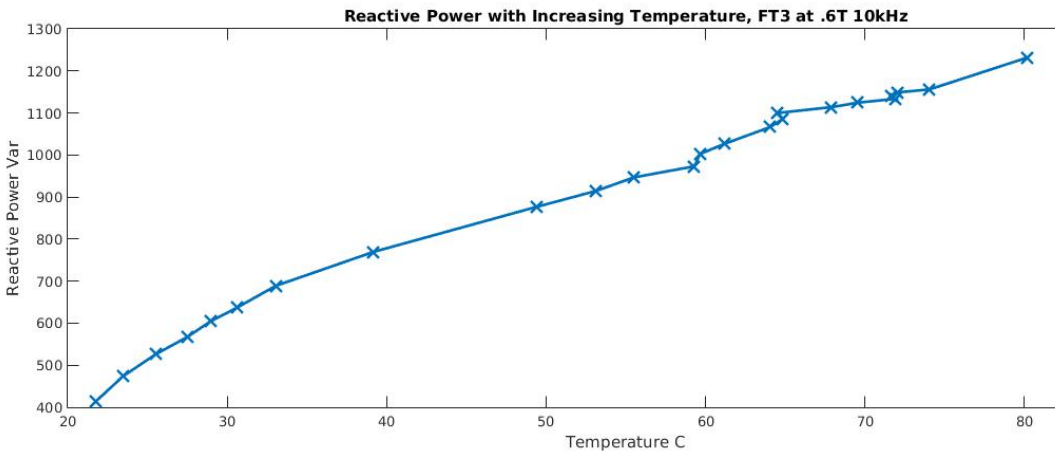

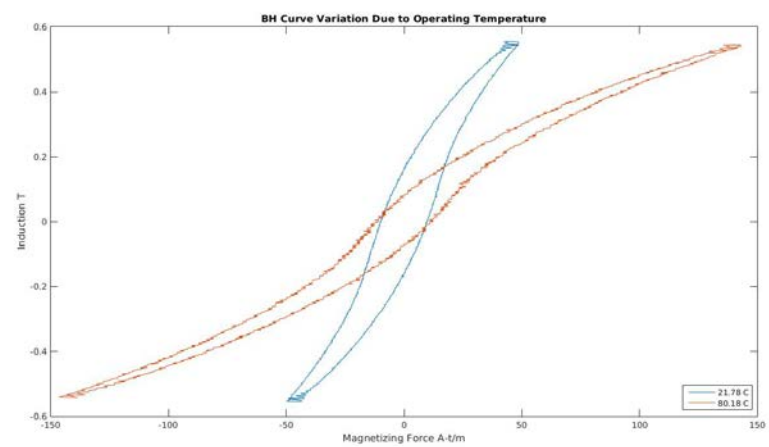

Thermal Decay of Permeability

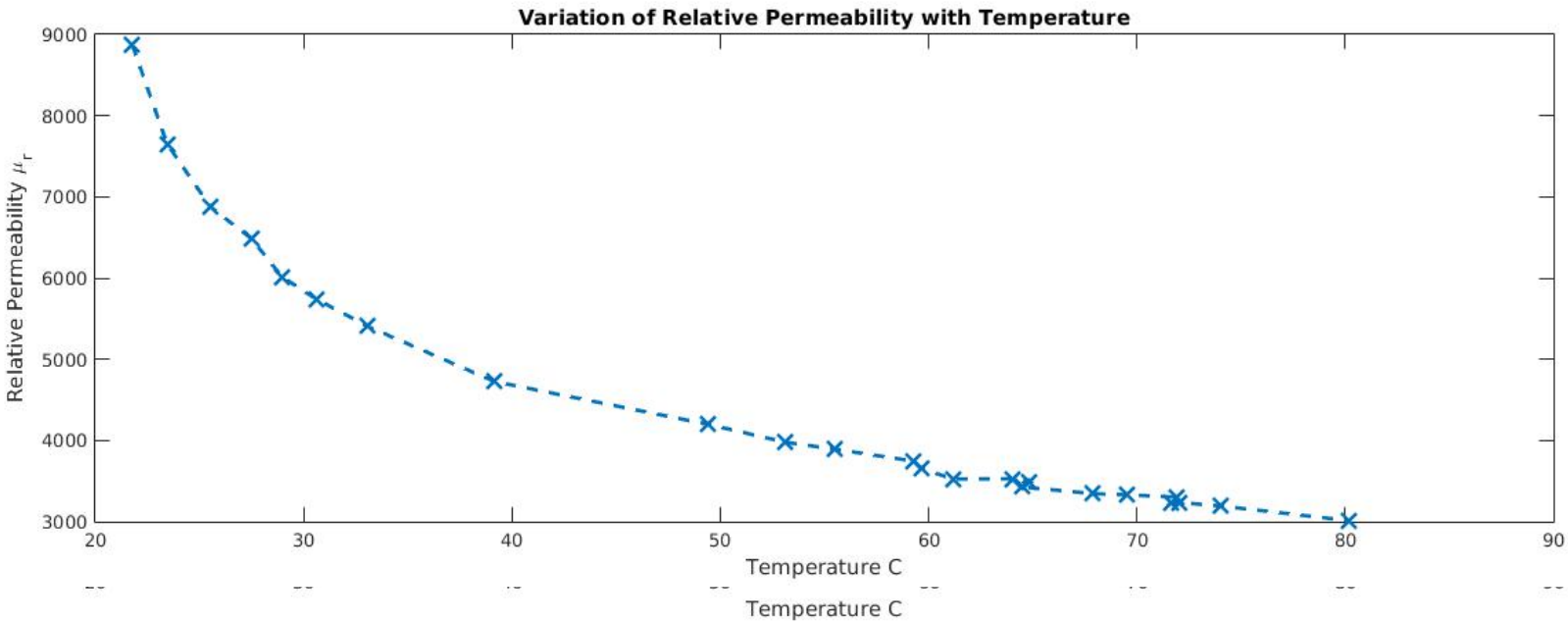

- Follows Q Variation
  - Min: 21.8C, μ_r = 8867
  - Max: 80.2C, μ_r = 3013
  - ~300% Decrease

Medium Frequency Normal Flux Losses

Gap Fringing and Leakage

Ribbon Core Joints And Fringing

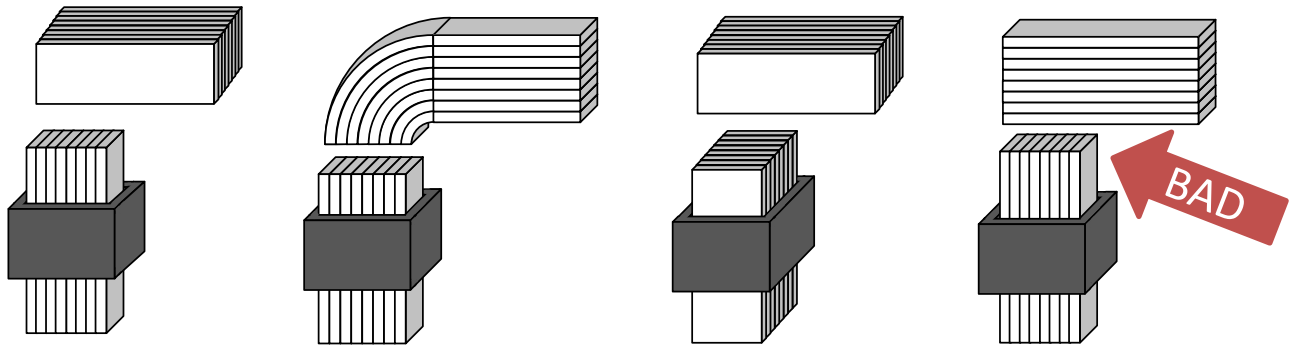

Rotated Wound Edge to Edge Face to Edge

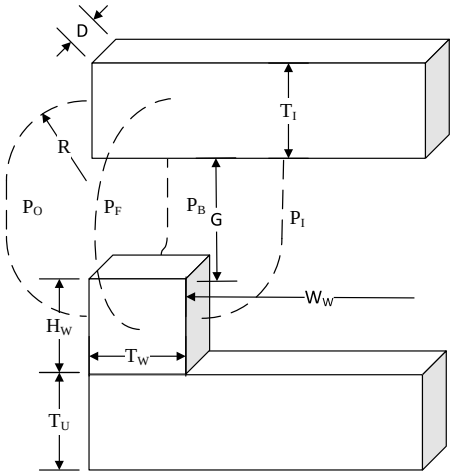

Core Connection	Magnetizing Flux	Window Leakage	Outer Leakage	Page Leakage	Inner Fringing	Outer Fringing	Page Fringing
Rotated	0	2	2	0	1	2	1
Wound	0	4	2	0	2	2	0
Edge on Edge	0	0	0	2	0	0	2
Face on Edge	1	4	2	0	2	1	0

The method of core joining has significant impact on leakage losses

Normal Flux Induced Eddy Currents

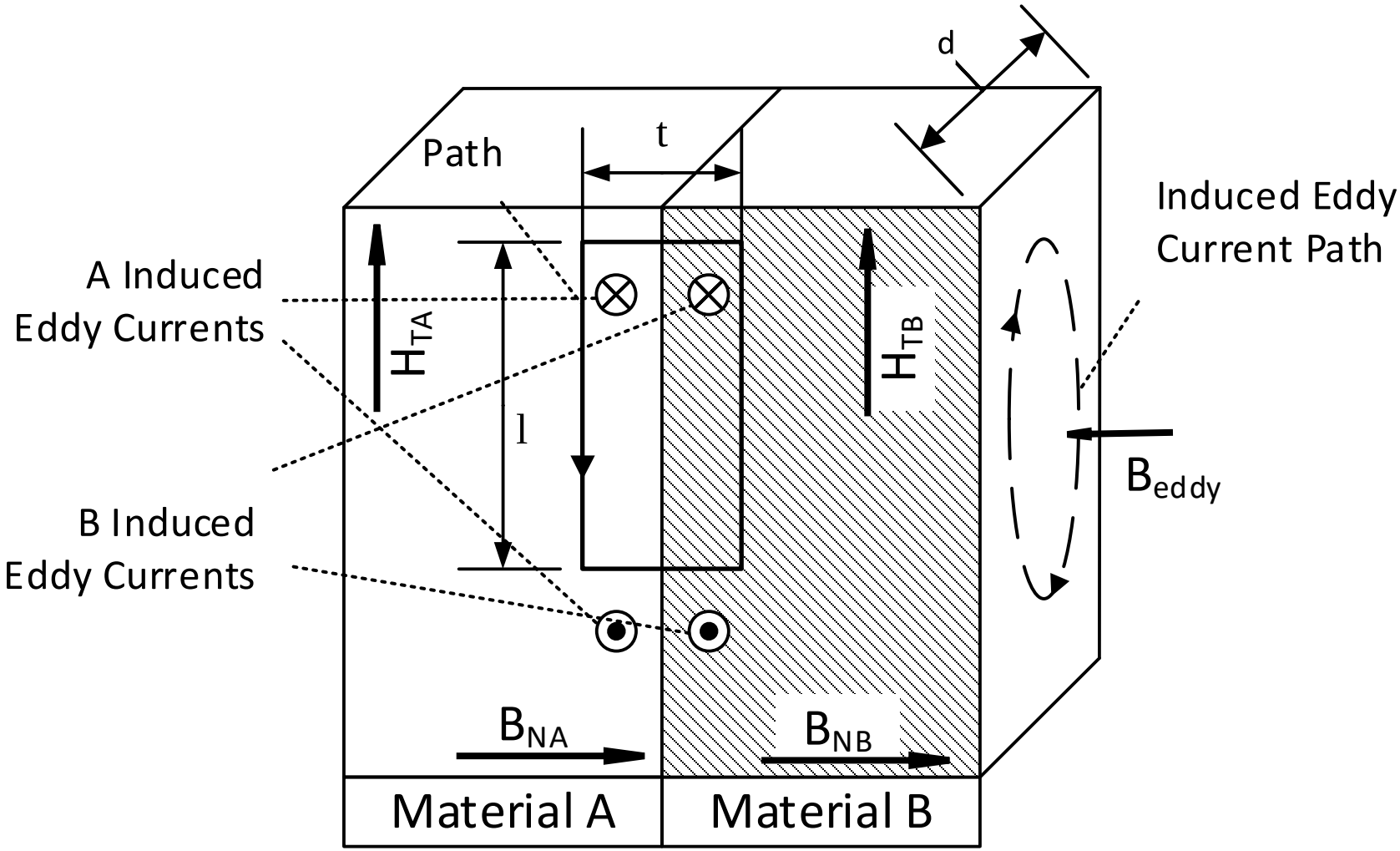

Leakage Test: Behaves Unexpectedly (Secondary is Shorted)

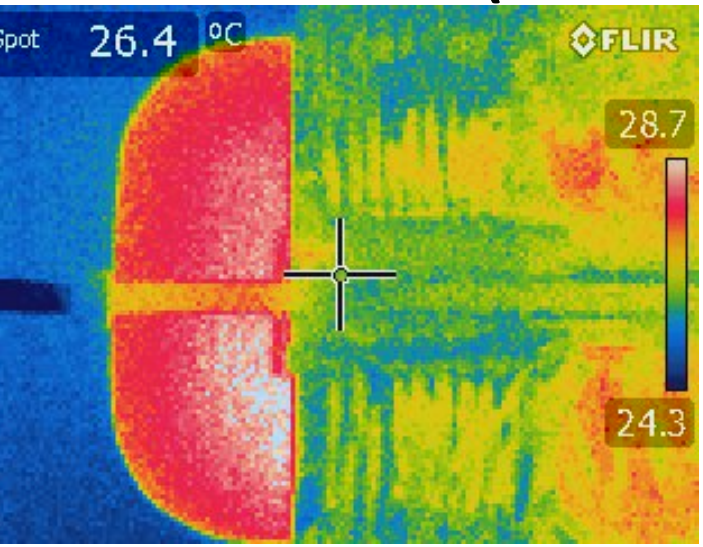

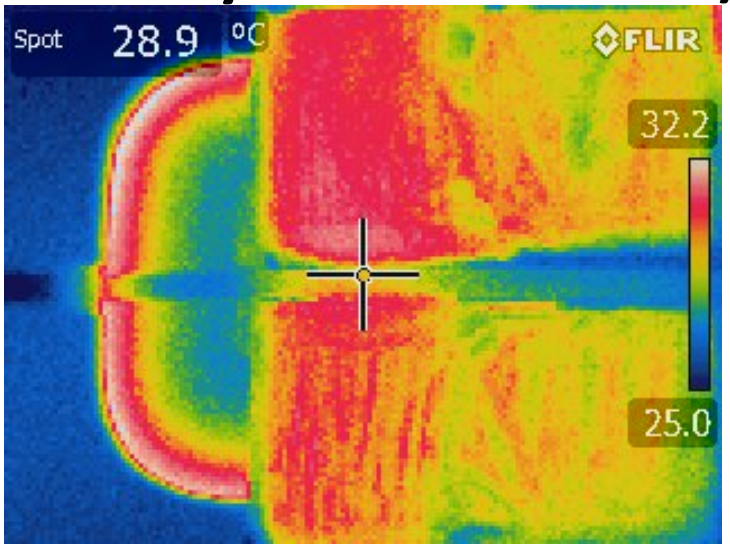

- Magnetizing (For Reference)

- Leakage Study
  - Exterior Hot Gradient
  - Unexpectedly High Losses

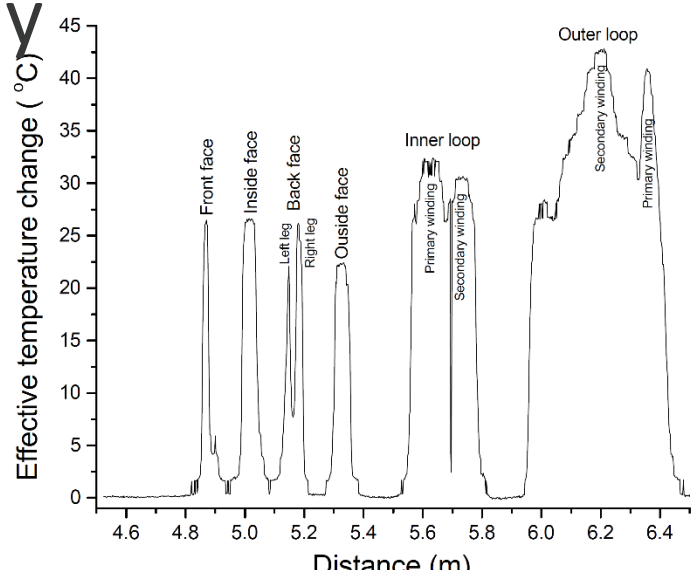

FEA Comparison of Magnetizing (Left) and Leakage (Right) Tests

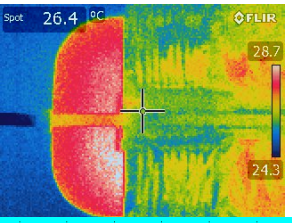

- High B Inner Paths (0.3 T)
- Low B Outer Paths (0.009 T)

- High B Outer Surfaces (0.003 T)
- Low B Inner Regions (0.001 T)

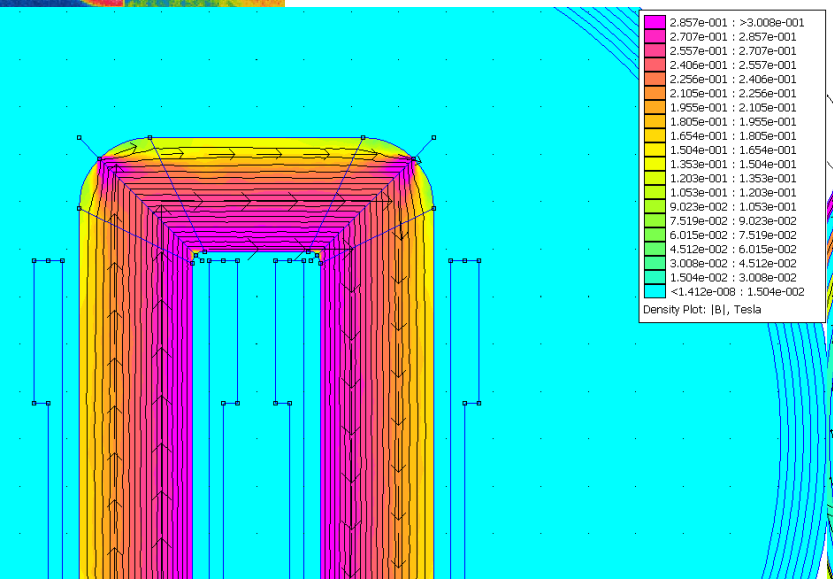

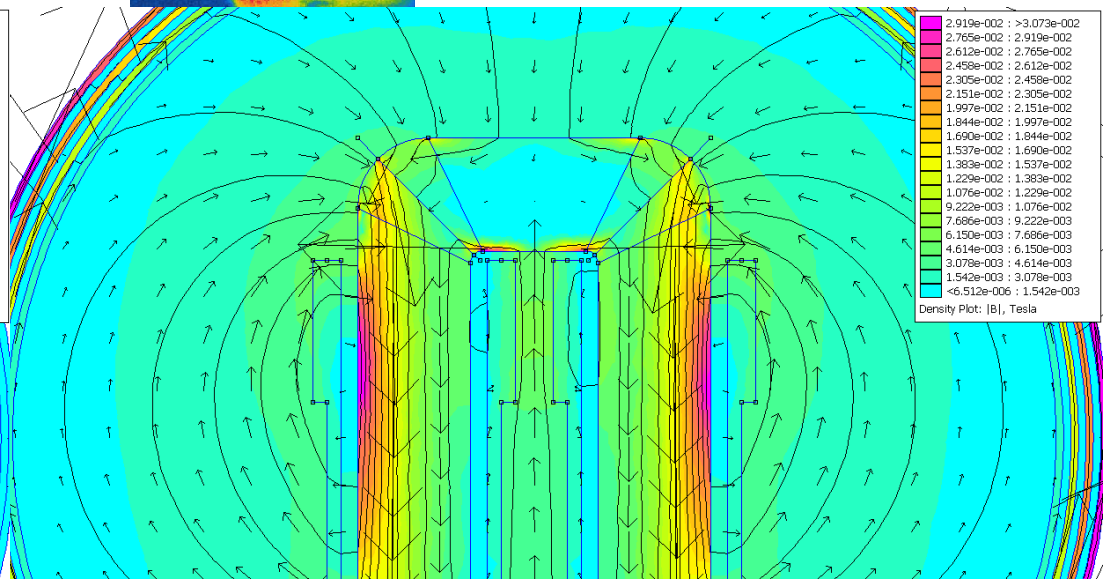

Short Circuit Test: Leakage Losses

1: I primary, 2: I secondary, 3: V primary

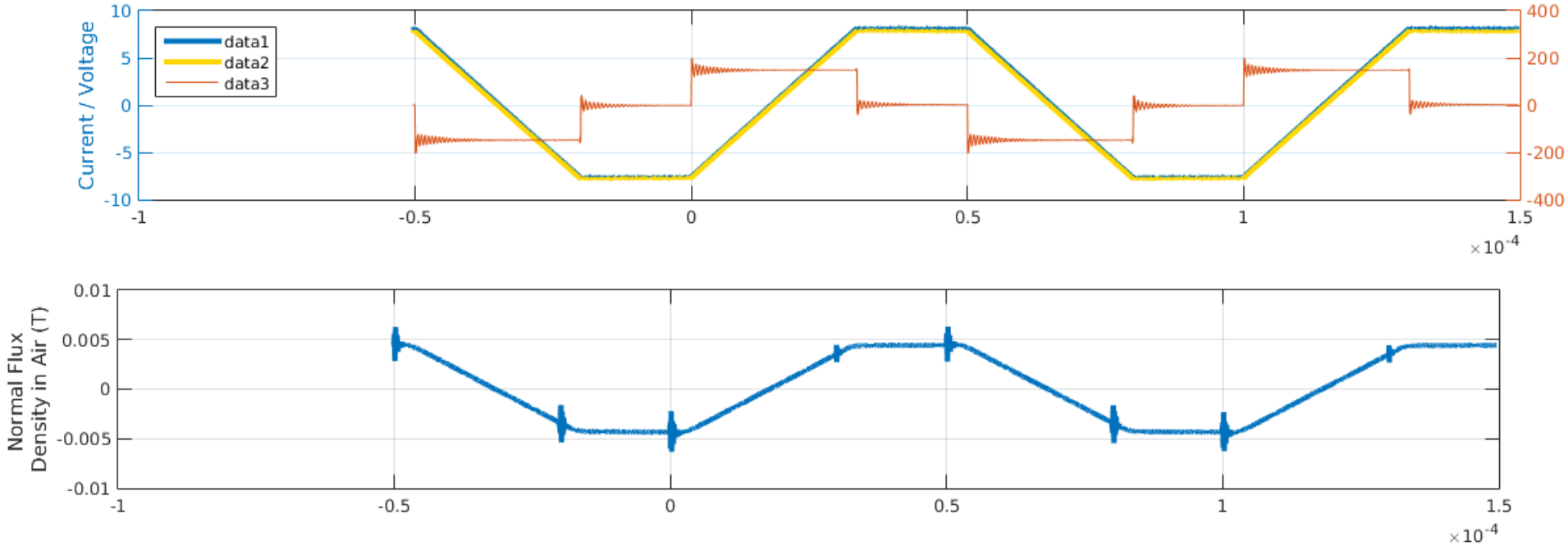

Loss Loops from Short Circuit Test

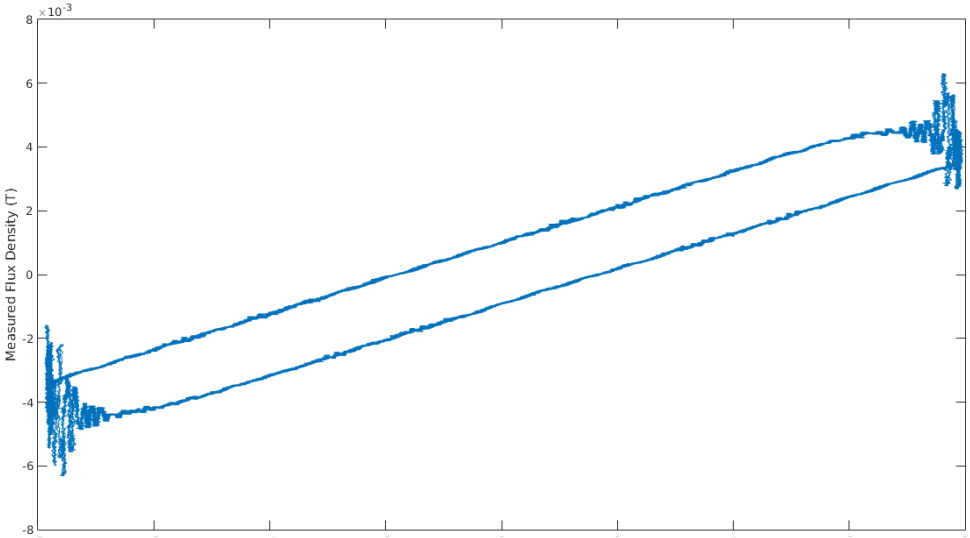

Flux Density Measured

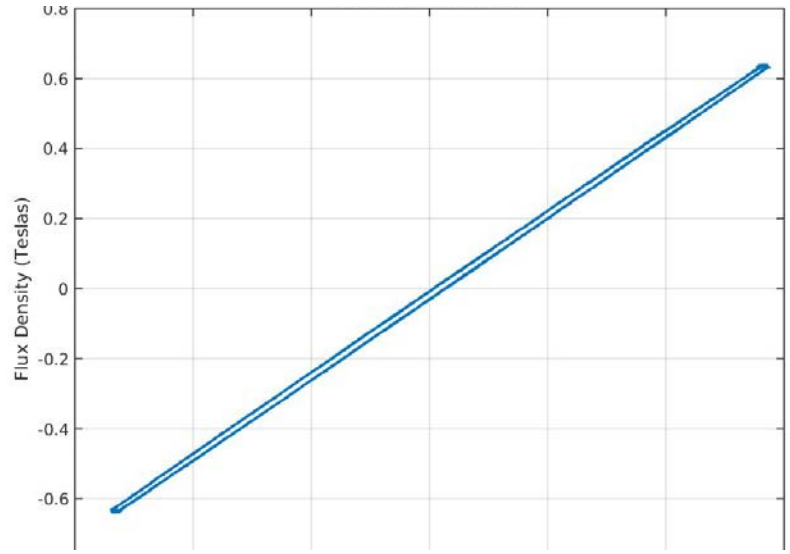

Flux Density Effective (Applied Voltage)

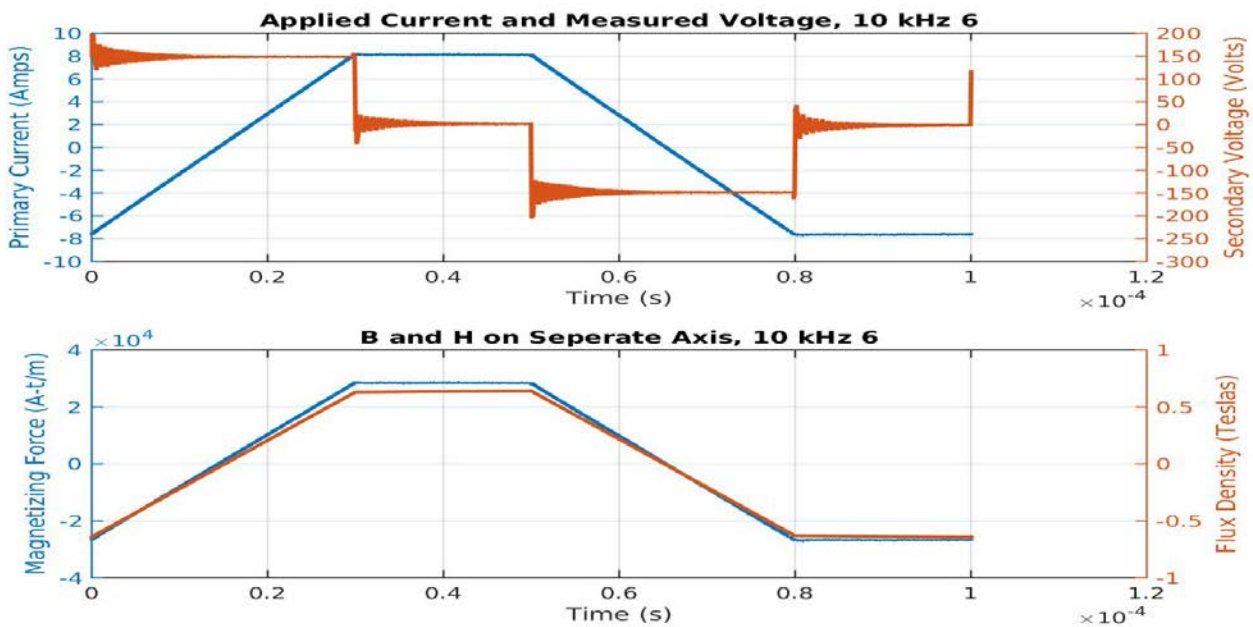

Proposed Leakage Loss Electrical Model

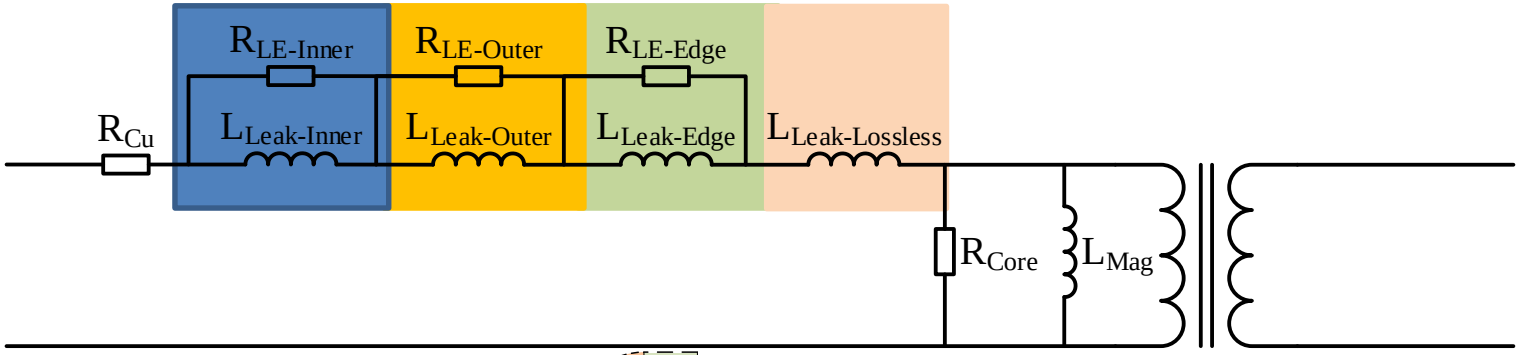

Half Core Flux Paths:

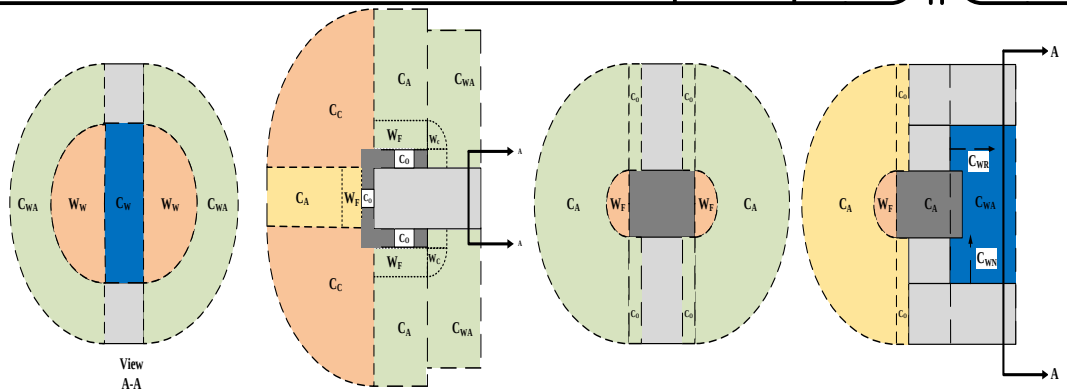

Cutout **Top** **Left** **Front**

Mix Material Shielding Solution
Provisional Patent: 221404-8470, 62/582,107
Paper Forthcoming

Core Loss Parameter Extraction

- Fit for Steinmetz

$$P_{VTriangular} = kf^{\alpha}B^{\beta}$$

- Three Point Extraction

$$\begin{bmatrix} P_1 \\ P_2 \\ P_3 \end{bmatrix} = \begin{bmatrix} 1 & \ln(f_1) & \ln(B_1) \\ 1 & \ln(f_2) & \ln(B_2) \\ 1 & \ln(f_3) & \ln(B_3) \end{bmatrix} \begin{bmatrix} \ln(k) \\ \alpha \\ \beta \end{bmatrix}$$

- Matlab
  - Loss Surface Fitting
  - Steinmetz Parameters
  - Broader and More Accurate

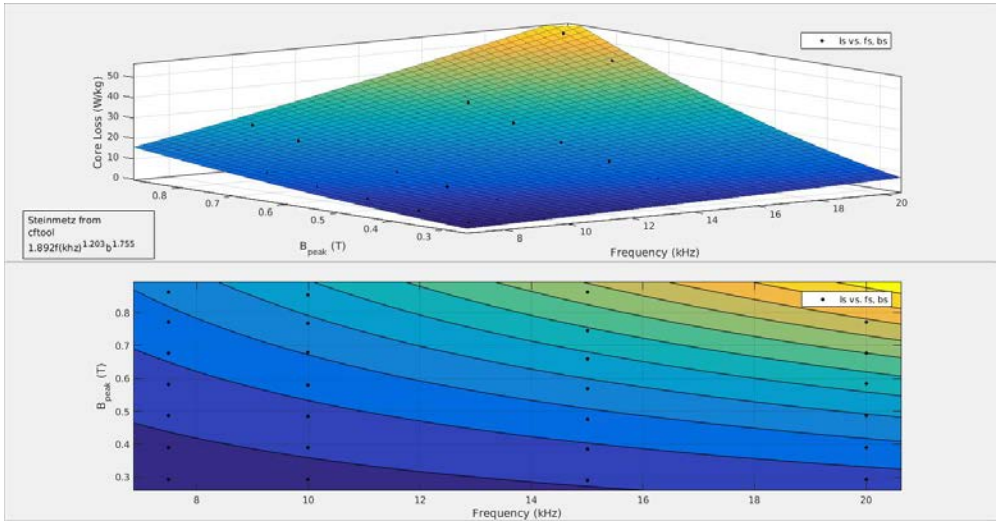

Permeability Parameter Extraction

- No Defined Fit
- Polynomial
  - Requires Several Terms

$$\mu_r = \mu_c - \beta_1 B - \beta_2 B^2 + \beta_3 B^3$$

- Custom Equation
  - Natural Decay

$$\mu_r = \mu_c - \beta_1 e^{\beta_2 B}$$

- Sensitivity
  - Materials Differ
  - Induction Sensitivity
  - Frequency Sensitivity

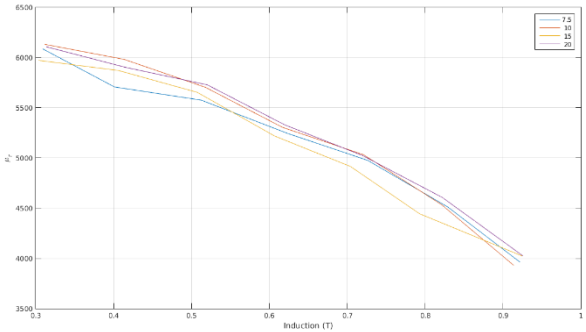

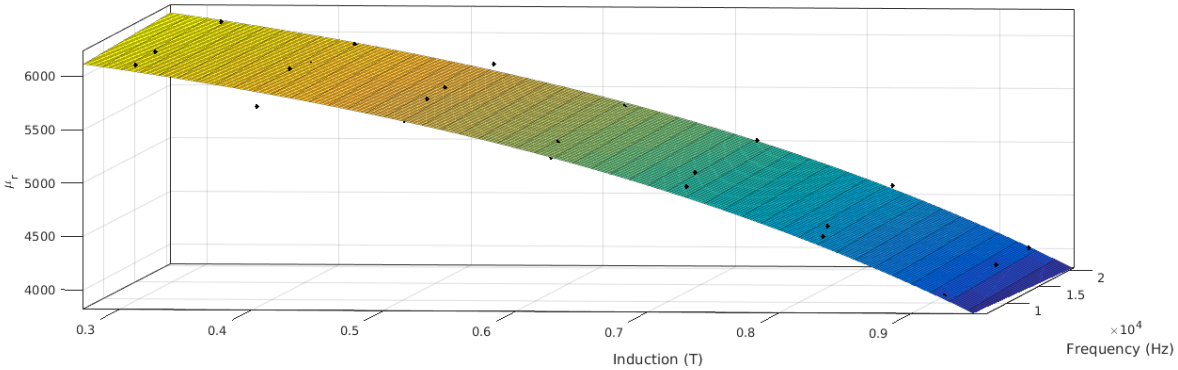

Relevant Publications

R. Beddingfield, P. Vora, D. Storelli and S. Bhattacharya, "**Trapezoidal characterization of magnetic materials with a novel dual voltage test circuit**," 2017 IEEE Energy Conversion Congress and Exposition (ECCE), Cincinnati, OH, 2017, pp. 439-446.

R. Beddingfield, S. Bhattacharya,"**Multi-parameter Magnetic Material Characterization for High Power Medium Frequency Converters**", The Materials, Metals, & Materials Society (TMS) Supplemental Proceedings, 2017, 693-708

R. Beddingfield, D. Storelli and S. Bhattacharya, "**A novel dual voltage source converter for magnetic material characterization with trapezoidal excitation**," *2017 IEEE Applied Power Electronics Conference and Exposition (APEC)*, Tampa, FL, 2017, pp. 1659-1666.

Future Presentations / Papers

Application Impact of Magnetic Ribbon Core Strain Annealing (TMS 18)

Leakage Flux Induced Losses and Shielding in Magnetic (TMS 18)

Submissions to JMR and JOM

Acknowledgements:

- DOE EERE SunShot Initiative SuNLaMP Program:
  - Combined PV / Battery Grid Integration with High Frequency Magnetics and Wide Bandgap Semiconductor Enabled Power Electronics (NETL Led)
- DOE EERE Advanced Manufacturing Office NGEM Program (Eaton Led)

This technical effort was performed in support of the National Energy Technology Laboratory's ongoing research under the RES contract DE-FE0004000.

This project was funded by the Department of Energy, National Energy Technology Laboratory, an agency of the United State Government, through a support contract with AECOM. Neither the United States Government nor any agency thereof, nor any of their employees, nor AECOM, nor any of their employees, makes any warranty, expressed or implied, or assumes any legal liability or responsibility for the accuracy, completeness, or usefulness of any information, apparatus, product, or process disclosed, or represents that its use would not infringe privately owned rights. Reference herein to any specific commercial product, process, or service by trade name, trademark, manufacturer, or otherwise, does not necessarily constitute or imply its endorsement, recommendation, or favoring by the United States Government or any agency thereof. The views and opinions of authors expressed herein do not necessarily state or reflect those of the United States Government or any agency thereof.